DATA EAST®™

7 + 1 off Rd
1 Gen
1 Dat

MAVERICK
THE MOVIE

This Manual is 100% Complete with all schematics & drawings.

Data East Pinball, Inc.
1990 Janice Avenue
Melrose Park, IL 60160
✆ 1-708-345-7700
FAX 1-708-345-7889
1-800-KICKERS

VERICK, characters, names, and all related indicia are trademarks of Warner Bros. © 1993, 1994

E BLACKWELL
or, Technical Support

ERIC WINSTON
Technical Support Engineer

JAY ALFER
Tech. Documentation Admin.

STEVE NOVAK
Technical Support Manager

Copyright © 1994
Data East Pinball, Inc. USA

780-5031-00

1-800 5425378

CPU JUMPER TABLE

Game	CPU* Ver.	ROM Position	Jumpers Installed	Jumpers Removed	Game	CPU* Ver.	ROM Position	Jumpers Installed	Jumpers Removed
01. Laser War	1	5C	J4 J6a J7a	J5 J6 J7b	14. Star Trek	3	5C	J5	J4
	2	5B, 5C	J4 J5a J6a	J5 J5b J6b	15. Hook	3	5C	J5	J4
02. Secret Service	2	5B, 5C	J4	J5	16. Lethal Weapon 3	3	5C	J5	J4
03. Torpedo Alley	2	5B, 5C	J4	J5	17. Star Wars	3	5C	J5	J4
04. Time Machine	2	5B, 5C	J4	J5	18. Rocky & Bullwinkle & Friends	3	5C	J5	J4
05. Playboy	2	5B, 5C	J4	J5	19. Jurassic Park	3	5C	J5	J4
06. ABC Monday Night Football	2	5B, 5C	J4	J5	20. Last Action Hero	3	5C	J5	J4
07. Robocop	2	5B, 5C	J4	J5	21. Tales from the Crypt	3	5C	J5	J4
08. Phantom of the Opera	2	5B, 5C	J4	J5	22. The Who's Tommy	3	5C	J5	J4
09. Back to the Future	3	5B, 5C	J4	J5	23. WWF Royal Rumble	3	5C	J5	J4
10. The Simpsons	3	5B, 5C	J4	J5	24. Guns N' Roses	3	5C	J5	J4
11. Checkpoint	3	5B, 5C	J4	J5	25. Maverick	3	5C	J5	J4
12. Teenage Mutant Ninja Turtles	3	5B, 5C	J4	J5					
13. Batman	3	5B, 5C	J4	J5					

Board Combinations with **ROM** at Location **5C** (Game 1, Ver1) **Installed** J1b, J3, J4, J6a, **J7a** & J8 **Removed** J1a, J2, J5, **J6** & **J7b**

Bd. Combinations w/ **ROM** at Locations **5B, 5C** (Game 1, Ver2) **Installed** J1b, J3, J4, **J5a, J6a, J7b** & J8 **Removed** J1a, J2, J5, **J5b, J6b,** & **J7a**

Bd. Combinations w/ **ROM** at Loc. **5B, 5C** (Games 2-13, Ver2/3) **Installed** J1b, J3, **J4, J5b, J6b,** J7b & J8 **Removed** J1a, J2, **J5, J5a, J6a** & J7a

Bd. Combinations with **ROM** at Loc. **5C** (Games 14-25, Ver3) **Installed** J1b, J3, **J5,** J5b, J6b, J7b & J8 **Removed** J1a, J2, **J4,** J5a, J6a & J7a

* Version 1 has a 2K RAM which is a 24-pin IC in Position 5D; Version 2/3 have a 8K RAM which is a 28-PIN IC in Position 5D.

Board Compatibility (Reflexive & Non-Reflexive) of CPU Boards

Version 1 and 2—**Reflexive**—Solenoid Drive Transistor is enabled directly by a *switch closure* on the solenoid assembly. Version 3—**Non-Reflexive**—Solenoid Drive Transistor is enabled by the CPU after reading a *switch closure* in the Switch Matrix. All CPU Boards are *backwards compatible* (e.g. Jurrasic Park / Ver. 3 to Time Machine / Ver. 2). Swapping a Version 2 Board to a Version 3 is not possible due to the special solenoids section (i.e. Slingshots, Turbo Bumpers, etc.) changing from **Reflexive** to **Non-Reflexive** on Version 3 Boards.

Power-Up CPU Self Tests

Upon power-up, the CPU Board performs a series of self tests of major components. Turn the game on while observing the LEDs on the CPU Board. Tests of the PIAs, RAM, and EPROMs are performed automatically and results of the tests are indicated by the PIA LED.

With all tests passed, the LEDs illuminate in the following sequence at power turn-on. The PIA and +5v LEDs illuminate immediately. Approximately 1/2-second later, the PIA LED goes out and the Blanking LED illuminates; the +5v and Blanking LEDs remain illuminated until the game is turned off. Test failures are indicated with the PIA LED:

(Fig. 1)

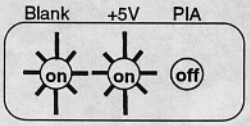

Normal Operation

PIA LED	SUSPECT COMPONENT
Stays On	One of the 6821 PIAs
Flashes 1 Time	6264 RAM at location D5
Flashes 2 Times	EPROM at location C5

DISPLAY READS "OPEN THE DOOR" -- This indicates a faulty memory condition in RAM. Opening the Coin Door will initiate a Factory Restore, by opening the Memory Protect Switch. Check battery voltage at CMOS RAM with power off.

QUICK REFERENCE FUSE CHART

PPB BOARD		POWER SUPPLY BOARD	
F1	5A Slo-Blo G.I. 6.3vAC	F1	7A Slo-Blo +5vDC Regulator Input (9vAC)
F2	5A Slo-Blo G.I. 6.3vAC	F2	7A Slo-Blo +5vDC Regulator Input (9vAC)
F3	5A Slo-Blo G.I. 6.3vAC	F3	Not Used
F4	5A Slo-Blo G.I. 6.3vAC	F4	8A Slo-Blo Switched Illumination Buss (18vDC)
F5	5A Slo-Blo Flipper Power & 50v coils	F5	4A Slo-Blo Solenoid (32vDC)...
F6	5A Slo-Blo Flash Lamps (32vDC) Right		Bumpers, Slingshots, etc.
F7	3A Slo-Blo Flipper Power & 32v coils Left	F6	5A Slo-Blo Solenoid Buss (32vDC)
F8	4A Slo-Blo 50v coils	F7	0.5A Slo-Blo Display Reg. Input (90vAC)
F9	5A Slo-Blo 50v coils		

MAVERICK
THE PINBALL

Table of Contents

GAME SPECIFICATIONS 1
- Power Requirements 1
- PROM Summary 1
- Transportation 1
- Overall Dimensions 1
- Game Assembly Procedures 2
- Leg Leveler Adjustment & Easy Access Service System 3
- Backbox Layout, Fuse & Relay Locations 4

GAME OPERATION & FEATURES 5
- Standard Features 5
- Extra Ball (EB) Buyin Feature 5
- Manual Percentaging 5
- Playfield Overview and Game Rules 5

AUDIT FUNCTIONS 13
- General 13
- Audits - 'Quick Look' Functions (01 - 12) 13
- Audit Table 14
- Audits - Expanded Generic Functions (13 - 46) 15
- Audits - Expanded Game Specific Functions (47 - 82) 16

GAME ADJUSTMENTS 19
- General 19
- Replay and Generic Features, Replays (Adj. 01 - 06) 19
- Game Adjustment Table 20
- Game Difficulty Adjustment (Adj. 07) 21
- Novelty / 5-Ball / Add-A-Ball Settings 21
- Game Pricing Adjustment (Adj. 08) 22
- Custom Pricing Table 22
- Standard Pricing Table 23
- Additional Generic Features (9-44, 49-59, 99) 24
- Game Specific Features (45-48) 26

GAME DIAGNOSTICS 27
- Entering Diagnostics 27
- Service Credits 27
- Tech Alert 37
- Easy Trough Clear 27
- Burn-In Minutes 28
- Sound Tests & Chart 28
- Speaker Phase Testing 28
- Digital Display Test 28
- Dot Matrix Display Test 29
- Paddle Wheel Test 29
- OPTOs Test 29
- Switch Tests & Switch Matrix Chart 30
- Switch Matrix Locations, Descriptions & Switch Part Numbers 31
- Lamp Tests & Lamp Matrix Chart 32
- Lamp Matrix Locations & Descriptions 33
- Flash Lamp / Coil Tests 34
- Backbox and Playfield Flashlamp / Coil Locations 34
- Switch, CPU Controlled Auxillary & Constant Power Chart 35
- Coil Chart Wiring Schematic 36

Continued on the next page.

Copyright © 1994
Data East Pinball, Inc. USA

PARTS IDENTIFICATION (PINK SECTION) **38**
Backbox Parts 38
Cabinet Parts 39
Playfield - Major Assemblies 40
Playfield - Major Ramp Assemblies & Wire Ramps 41
Playfield - Top Parts & Butyrates (Locations) 42
Playfield - Top Parts & Butyrates (Tables/Key) 43
Playfield - Rubber Parts 44
Playfield - Posts (Part Numbers & Illustrations Shown Actual Size) 45
Playfield - Lamps with Sockets (Part Numbers & Illustrations Shown Actual Size) 46, 47
Playfield - Lamp Board Layouts 47
UNIQUE PARTS (BLUE SECTION) **49**
4-Ball Switch Assembly (500-5891-00) 49
Lock Ball Assembly (for 4-Ball Switch Ass'y) (500-5684-01) 49
Deflector (for 4-Ball Switch Ass'y) (535-6606-01) 49
Flipper Assembly, Lower: Right (500-5693-01), Left (500-5693-02) 50
Flipper Assembly, Upper: Right Only (500-5914-01) 51
Lower Slingshot Assemblies (500-5226-00) 52
Vertical Up-Kicker (VUK) (500-5839-00) 52
Turbo Bumper Assembly (500-5227-02) 53
Skill Launch Assembly (500-5862-01) 54
Knocker Assembly (500-5081-00) 55
Poker Chip Shooter Assembly (500-5856-06) 55
Laser Kick Back Assembly (500-5838-00) 55
Maverick 5-Bank Special D.T. Assembly (500-5912-00) 56
Autodrop Assembly (515-6111-00) 57
Drop Target 3-Bank & 4-Bank Assemblies: Center (500-5621-03), Right (500-5621-04) 58
Stand-Up Target Assemblies (Narrow Rectangular, White) (500-5857-08) 59
Drop Target 5-Bank Assembly, Left (500-5799-05) 60
Paddle Wheel Assembly (500-5854-01) 62
Ball Lock Assembly (500-5867-01) 63
Paddle Wheel / Left Orbit Ball Deflector (500-5886-01) 63
Plastic Right Ramp Assembly (500-5883-01) 64
Plastic Ramp Diverter Assembly (515-6139-00) 65
Plastic Ramp Gate Assembly (515-6137-00) 65
Wire Ramp with OPTO's Assembly (500-5884-00) 66
Backpanel Assembly (500-5870-01) 67
SCHEMATICS / TROUBLESHOOTING (YELLOW SECTION) **69**
Power Wiring Diagram 69
Cabinet Wiring Diagram 70
Backbox Wiring Diagram 71
Playfield Coil / Flashlamp Wiring Diagram 72
Playfield Special Coil Diagram 73
Playfield Switch Wiring Diagram 74
Playfield Lamp Wiring Diagram 75
CPU Board Assembly Diagram 76
CPU Board Logic Diagram (Sheets 1-4) 77-80
Power Supply Board Schematic & Component Layout 81
Sound Board Component Layout 82
Sound Board Schematic (520-5050-03) 83
Display Controller Board Schematic (Page 1 of 2) 84
Display Controller Board Schematic (Page 2 of 2) 85
Display Controller Board Component Layout 86
Display Driver, Dwg. 1 (Cherry), Dwg. 2 (Babcock), Dwg. 3 (Dale) 87-89
Solid State 3-Flipper Theory of Operation & Circuit Troubleshooting Flowchart 90
Solid State 3-Flipper Board Diagram 91
Solid State 3-Flipper Wiring Diagram 92
PPB Diagram 93
OPTOs Theory of Operation & Diagram 94

GAME SPECIFICATIONS

POWER REQUIREMENTS

This game is provided with a 3-prong plug and **must be connected to a properly grounded outlet to reduce shock hazard** and insure proper game operation. Refer to AC Power Wiring Diagram for transformer connections required for normal, high, and low line conditions.

Normal Line:	109 to 129 -Volts AC (211 to 225 -Volts AC)
High Line:	(226 to 235 -Volts AC)-- European, International
Low Line:	95 to 108 -Volts AC (200 to 210 -Volts AC)

PROM SUMMARY

CPU Board:	Location C5
Sound Board:	Locations U17 (Voice ROM 1), U21 (Voice ROM 2), and U7 (Sound ROM)
Display Controller Board:	Location U1 (ROM 0) and U4 (ROM3)

TRANSPORTATION

To reduce the possibility of damage, observe the following precautions whenever transporting the game. Lower the backbox and secure it to the cabinet. Remove the legs and secure the game within the transporting vehicle.

OVERALL DIMENSIONS

Shipping Crate Dimensions	
Height	**55-1/2"**
Width	**30-1/2"**
Length	**31"**
Approx. Wt.	**250 lbs.**

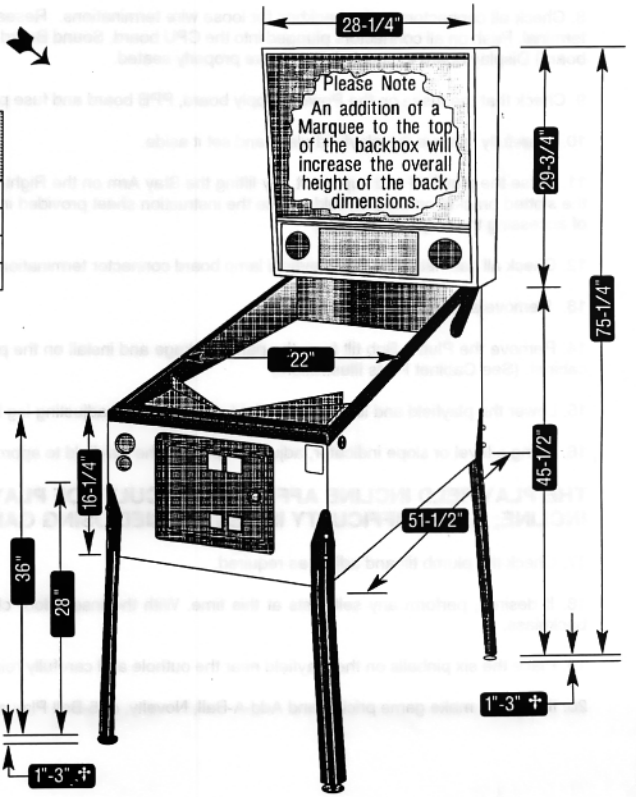

† Note: The Leg Levellers can add up to 2 inches to the overall height of the front and back dimensions.

Game Assembly Procedures

(Refer to the Illustrations on pages 3 & 4)

1. Open the top of the carton and lay it on its side with the bottom of the cabinet down. Using the plastic banding strip as a handle, slide the game out of the carton.

2. Remove all packing material. Cabinet legs are located on top of the front moulding above the coin door and the assembly parts package is in the cashbox. There should be four leg levelers, eight leg bolts, six pinballs and a large Allen Wrench, used for securing the backbox, is inserted & taped to the rear of cabinet.

3. Attach leg leveler from the parts package to each leg, make sure that each leveler is threaded through a hex nut before threading it into the leg.

4. Support rear of cabinet and attach rear legs using two leg bolts for each leg.

5. Support front of cabinet and attach front legs using two leg bolts for each leg.

6. While assuring that no cables are being pinched, carefully raise the backbox and secure it in its upright position with the Allen Wrench in the hole in the back of the cabinet and rotating the wrench 270 degrees(3/4 turn).

7. Remove the backbox keys from the playfield glass, unlock and carefully remove the backglass. Set the backglass aside.

8. Check all connectors in the backbox for loose wire terminations. Reseat any loose wire by pushing in on the terminal. Push on all connectors plugged into the CPU board, Sound Board, Power Supply Boards, and (on insert board) Display board to check that they are properly seated.

9. Check that the fuses on the Power Supply board, PPB board and fuse panel are seated properly.

10. Carefully remove the playfield glass and set it aside.

11. Raise the playfield and support it, by lifting the Stay Arm on the Right Side of the Cabinet and locking it into the slotted bracket on the playfield. (Use the instruction sheet provided in the game to see alternative methods of accessing the playfield bottom.)

12. Check all cabinet cable and playfield lamp board connector terminations.

13. Remove all shipping tie downs.

14. Remove the Plumb Bob tilt from the parts package and install on the pendulum wire on the inside left of the cabinet. (See Cabinet Parts Illustration.)

15. Lower the playfield and level the playfield side-to-side by adjusting leg levelers.

16. Using a level or slope indicator, adjust the pitch of the playfield to approximately 6.5 degrees.

THE PLAYFIELD INCLINE AFFECTS DIFFICULTY OF PLAY. USE THE RECOMMENDED INCLINE; GAME DIFFICULTY IS BEST VARIED USING GAME ADJUSTMENTS.

17. Check the plumb tilt and adjust as required.

18. If desired, perform any self tests at this time. With the insert door closed, carefully reinstall and lock the backglass.

19. Place the six pinballs on the playfield near the outhole and carefully reinstall the playfield glass.

20. If desired, make game pricing and Add-A-Ball, Novelty, or 5-Ball Play adjustments at this time.

Please Note New Leg & Leveler

LEG LEVELER ADJUSTMENT

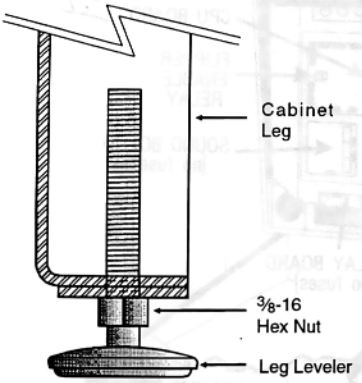

STEP 1
Assemble all (4) legs and levelers as shown in the diagram. Be sure the leveler is turned all the way in.

STEP 2
Attach leg assemblies to cabinet with leg bolts provided.

YOUR PLAYFIELD PITCH IS NOW AT 6.5° *AS REQUIRED FOR PROPER GAME PLAY!* See Step 3.

STEP 3
Verify 6.5° pitch. Minor adjustment(s) may be necessary depending on the location floor being level.

For custom adjustment greater than 6.5° can be acheived by turning out the leg leveler, however, it is not recommended.

EASY ACCESS SERVICE SYSTEM

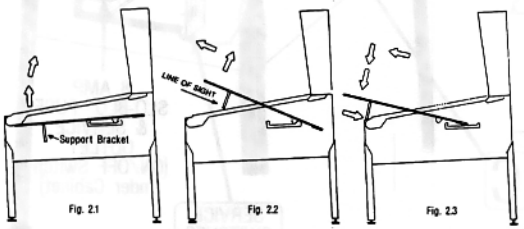

This position is useful to service:

Trough Switches, Connectors at back of cabinet, Cleaning the Playfield, etc.

SERVICE POSTION 1
Lift the playfield ***using the left and right ball guides*** upward (Fig. 2.1) until the playfield support brackets can be seen to clear cabinet front (Fig. 2.2). At this time, pull playfield toward the front of the cabinet, checking that the mechanical components clears the cabinet front (Fig. 2.3). Then rest the playfield on the support brackets at the front channel of cabinet. ***Reverse procedure when service is complete.***

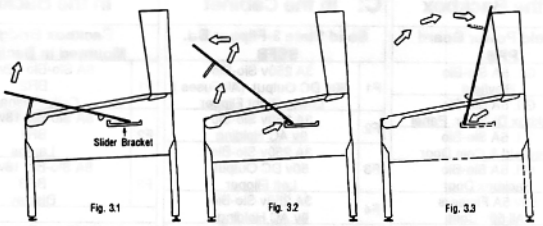

This position is useful to service:

All Playfield Bottom Components, Cabinet Components, etc.

SERVICE POSTION 2
With the playfield at rest (Fig. 3.1), hold sides of playfield and pull toward the front of the cabinet (approximately 6-8"), until resistance is felt from the slider brackets located on either side of the cabinet (Fig. 3.2). At this time, swivel playfield toward the backbox, then rest on top edge of the backbox. ***Reverse procedure when service is complete.***

BACKBOX LAYOUT, FUSE & RELAY LOCATIONS

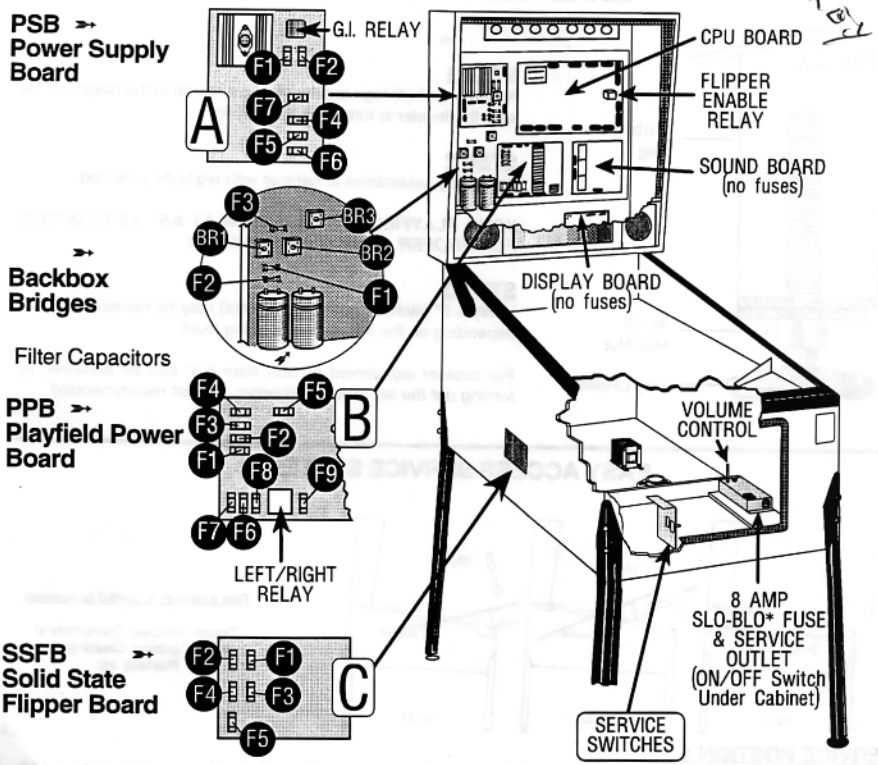

Note: Backbox Part Numbers on Page 38.

A: In the Backbox	
Power Supply Board PSB	
F1	7A Slo-Blo +5vDC Regulator Input (9vAC)
F2	7A Slo-Blo +5vDC Regulator Input (9vAC)
F3	Not Used
F4	8A Slo-Blo Switched Illum'tion Buss (18vDC)
F5	4A Slo-Blo Solenoid (32vDC) Bumpers, Sling-shots, etc.
F6	5A Slo-Blo Solenoid Buss (34vDC) L/R Relay Coils/Flash
F7	0.5A 250v Slo-Blo Display Reg. Input (90vAC)

B: In the Backbox	
Playfield Power Board PPB	
F1	G.I. 5A Slo-Blo Playfield
F2	G.I. 5A Slo-Blo Backbox Dr./Spkr. Panel
F3	G.I. 5A Slo-Blo Playfield & Coin Door
F4	G.I. 5A Slo-Blo Backbox Door
F5	50v 5A Flippers /All 50v Coils
F6	32v Flash Lamps 3A Slo-Blo/Right
F7	32v 3A Coils/Flash Right/Left
F8	50v 4A / 50v Coils
F9	50v 5A Laser Kick

C: In the Cabinet	
Solid State 3-Flipper Bd. SSFB	
F1	3A 250v Slo-Blo 50v DC Output (All Fuses) Lower Right Flipper
F2	3A 250v Slo-Blo 9v AC Holding
F3	3A 250v Slo-Blo 50v DC Output Left Flipper
F4	3A 250v Slo-Blo 9v AC Holding
F5	3A 250v Slo-Blo 50v DC Output Upper Right Flipper

In the Backbox	
Backbox Bridges Mounted in Backbox	
F1	8A Slo-Blo 32v DC BR2 Coils/Flashers
F2	8A Slo-Blo 18v DC BR1 Lamps
F3	8A Slo-Blo 18v DC BR3 Display
Cabinet Fuses	
Main Fuse Line: 8A Slo-Blo 250v	
International 2X 4A Slo-Blo 250v	

GAME OPERATION & FEATURES

Standard Features

Insert coin(s), the game makes a sound for the first credit and generates sounds for each subsequent coin and the display indicates the number of credit(s) posted. Depress the credit button and a start-up sound is produced, the posted credit(s) are reduced by one. The display now indicates the player or # of players selected from the total depressions of the credit button. The display indicates the ball in play, and a ball is served to the shooter lane. Additional players may be added by pressing the Credit button before the end of ball 1. At game start, an introduction is shown followed by Skill Shot Graphics. (Note: Any 1/2 credit remaining during game play after the end of ball 1, or power down, will be eliminated.)

The second closure (adjustable) or prolonged closure of the plumb bob tilt switch tilts the ball in play. Closure of the slam tilt switch on the coin door ends the current game(s).

At the end of each ball, earned bonuses are collected. If the player enabled the EB Buy-In Feature*, the player now has the option of purchasing an extra ball to continue game play (See Extra Ball (EB) Buy-In Feature below), Otherwise, the system produces a random 2-digit number (a multiple of 10; 00 to 90) for a Match feature (adjustable). Matching the last two digits of a player score with this number awards a credit. Some geographical areas do not allow the award of a free game, this can be adjusted with Adj. 4, Replay Award. Players exceeding high score levels receive free credits (adjustable) and are able to enter their initials with the new High Score achieved. To enter your initials, use the left & right flipper buttons to choose letter or character as seen on the Visual Display. Hitting the Start Button locks the letter or character in. Procede with the 2nd & 3rd letter. The game then proceeds into the game-over mode and then to the attract mode. A custom message (adjustable) can be displayed during the attract mode.

*Extra Ball (EB) Buyin Feature

An option to add an extra ball(s) after the game is finished. TO ACTIVATE THE ***EXTRA BALL BUY-IN FEATURE***, THE PLAYER MUST PRESS THE EB BUY-IN BUTTON DURING THE COURSE OF THE GAME. At the end of normal game play, the same player may choose to continue the game at the same score and features active by pressing the EXTRA BALL BUTTON prior to the expiration of the "countdown timer." Pressing the START BUTTON or BOTH FLIPPERS SIMULTANEOUSLY cancels this feature. If the player does not have any credits, the player will get "more time" to add credit. The number of extra balls which can be added to a game can be adjusted with Adj. 38, Extra Ball Buyin Count. Default is **01**. Set to **01**, will allow only 1 extra ball to be purchased per game. Set to **UNLIMITED**, after the end of the game the countdown will appear after the end of each ball for the option of purchasing another extra ball. Set to **00**, will make this feature unavailable.

Manual Percentaging

This game is equipped with Manual Percentage Adjustment. As previously with our games, you can either set operator adjustments for a replay percent or you can set a fixed replay score.

If you set operator adjustments for a particular replay percent, the game will compute a recommended score to keep the game at that replay percentage. If a change is recommended and the game coin door is opened, the display will indicate a recommended replay score to beat and make a sound to alert the operator. By pressing the start button, the score to beat will be changed to the recommended level. If you close the coin door or go into Audit or Adjustment Mode, no score change will be made.

You may choose to ignore the recommended change; for example, you may not think last week's players were the usual crowd. Just close the door and the message will disappear without altering the existing level. Or you may choose to make a different score to beat adjustment; this is done by utilizing Adj. 02, Starting Replay Score.

Playfield Overview and Game Rules (See the following pages)

The following pages describe the Game Rules. On the next page is a playfield overview to show the locations of of the featured items. Your game includes an instruction card. The instruction card on the next page may be photo-copied as a temporary replacement if required. Please note, rules and featured items may be subject to change through production.

Playfield Overview and Game Rules

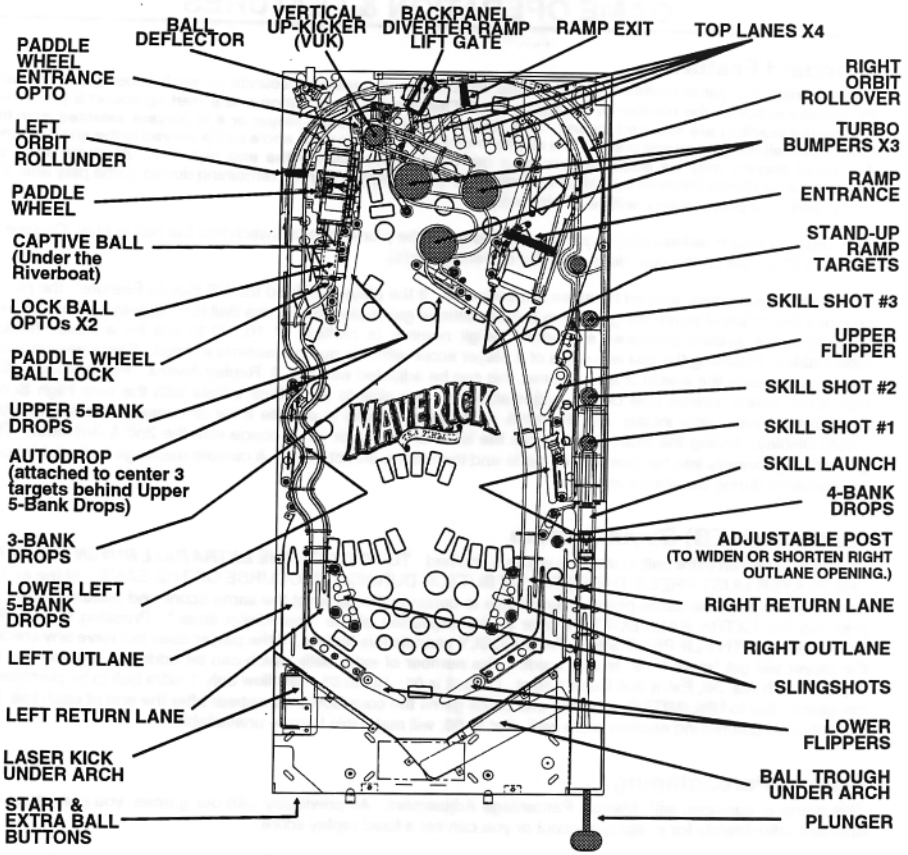

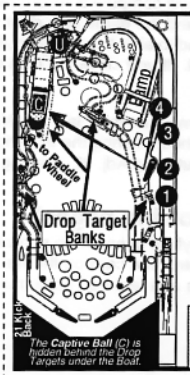

♣ ♦ ♠ ♥ Maverick, The Movie ♣ ♦ ♠ ♥

SKILL SHOT Shoot ❶, ❷, or ❸ for Award, or ❶ for "flipper skill shot" by hitting the ***Captive Ball*** (C) under the Riverboat.

MULTIBALL Shoot ***Ramp*** to score Jokers - 3 Jokers lights Paddle Wheel for ball lock. Lock balls inside the Riverboat to enable ***Multiball***.

JACKPOTS Shoot Ramp for ***Multiball Jackpots***, then complete all Drop Targets to light ***Super Jackpot*** at the Ramp.

PLAYING POKER Shoot cards on the lit bank(s) to win chips. Shoot ***Up-Kicker*** (U) to ***Raise*** or ***Fold.*** Cards on unlit banks score discards - complete your hand before discards reach zero.

CHIP FEATURES Win 5 chips to start a Chip Feature.

'21' Play Blackjack at ***Up-Kicker*** to relight 21 ***Kick Back.***

Hint **Pressing the Extra Ball Buyin Button during the course of a game activates the *Extra Ball Buyin Feature* at the end of game play!**

© 1994 Data East Pinball, Inc. 755-5068-00 Copy

copy & cut

MAVERICK
EZ PINBALL
GAME RULES

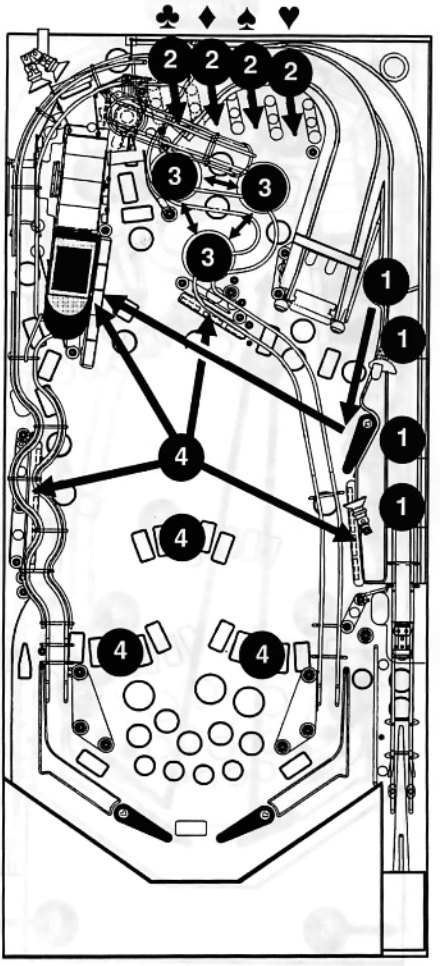

Plunger Skill Shots

Shoot the ball into the desired hole 1, 2 or 3 to collect the award indicated in the display. Shoot the ball into the unmarked hole, then hit the ball with the upper flipper into the **Captive Ball** under the *Riverboat* to start Drop Poker.

Card Suits (Top Lanes)

Completing the top lanes advances the bonus multiplier: 2X, 4X, 6X, 8X, to 10X. Subsequent completions score 20M. Use *flipper buttons* to change position of any lit lanes. BonusX resets at the start of each ball.

Turbo Bumpers

Turbo Bumpers start at 250K per hit each ball and increase by 250K every 10 hits up to a maximum of 1M.

Playing Poker

In regular single-ball play, players must beat the poker hand held by the characters on the playfield. Players must complete the *flashing target bank* to beat the playfield's hand.

When the Playfield Character Holds:	Player Must Shoot:
Ace of Spades	**Pair** (Ramp Stand-Ups)
Pair of Tens	**3-Of-A-Kind** (3-Bank) ***Full House*** (Ramp Stand-Ups & 3-Bank)
3-Of-A-Kind	**Straight** (Upper 5-Bank)
Full House	**4-Of-A-Kind** (Right 4-Bank)
Straight Flush	**Royal Flush** (Lower 5-Bank)

continued next page

MAVERICK
THE PINBALL
GAME RULES

Playing Poker cont.

While completing their hands, players have a limited number of **DISCARDS** as shown on the display. Hitting a card on an unlit target bank counts as a discard - and players must complete their hand before they run out of discards! If they do, they win the hand and a 5M chip, otherwise the player loses the hand.

Accumulate five (5) 5M chips to win a 25M chip and start a **Maverick Feature**.

Spot Card

Players who quickly shoot the **VUK** after the ball rolls through either return lane succeed in sneaking a card that they need into their hand!

Raise or Fold

Players can **RAISE** or **FOLD** on every hand dealt by shooting the **VUK** and pressing the indicated flipper button. Players who **RAISE** could win two 5M chips on their current hand - those who **FOLD** lose nothing and play continues as a new hand is dealt.

Winning Streak

Players multiply their chip value by the number of consecutive hands won. Winning a regular hand results in 5M x *Winning Streak*. Winning a hand after a **RAISE** awards 10M x *Winning Streak*. Those who **FOLD** ***WILL NOT*** break their current *Winning Streak*.

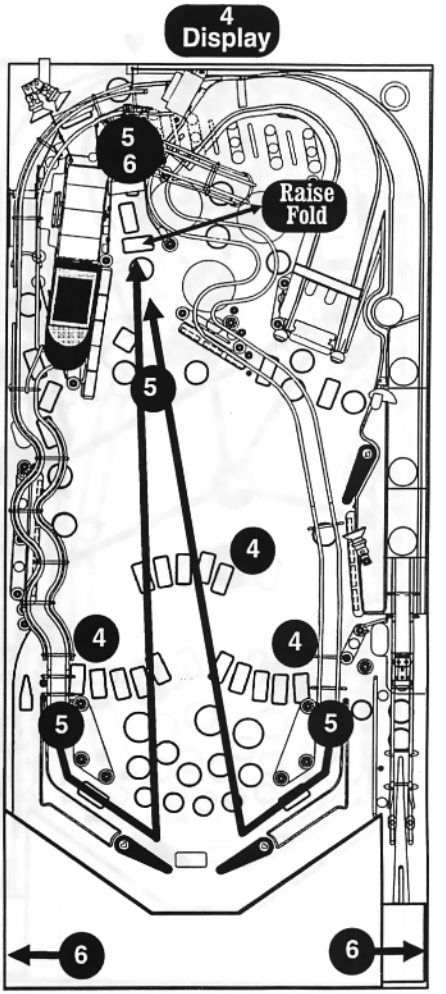

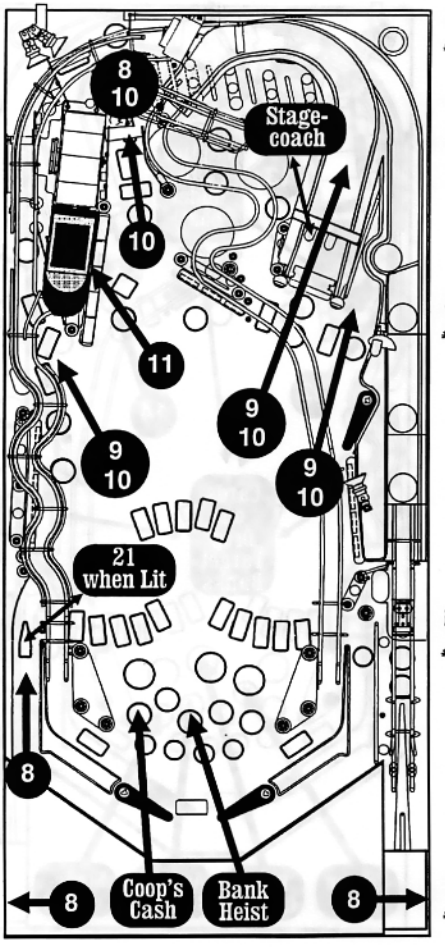

'21' for Kickback

If the *Kickback* is not lit, a shot to the **VUK** will deal a hand of *head-to-head Blackjack*. Players press the indicated *flipper button* to **HIT** or **STAND**. Dealer must **HIT** with 1-16 and **STAND** on 17-21. Players must be closer to **21** than the dealer's hand (without going over) to win. Pushes (ties) go to the player. Winning the hand relights the *Kickback*.

Stagecoach Mystery

11 randomly selected Awards are available for collection at the Stagecoach when lit. Mystery lites at 3, 7, 12, 18, 25, 33, 42 ... *Orbit Shots*. Awards are given in set order during Tournament Play.

Maverick Features:

A Feature is started whenever a player wins 5 chips and acquires a 25M chip.

Coop's Cash

Complete the **$** shots (**Left Orbit**, **VUK**, **Ramp**, and **Right Orbit**) as many times as possible before the timer expires. **$** shots start at 10M each. Completing all four starts a roving **$** shot worth 50M. Hitting the roving **$** adds 10M to the value of the four **$** shots and the feature restarts!

Bank Heist

Shoot the **Captive Ball** up to 3 times to rob the bank before the timer runs out. Value of the loot is 100M X number of hits.

Maverick Features cont.:

Lauren Belle

Shoot for the **Paddle Wheel** to collect as many Mystery payoffs as possible from the *Video Slot Machine* before the timer expires. The more times the player shoots the **Paddle Wheel**, the more liberal the payoffs from the slot machine become!

Angel's Revenge

Fast scoring in the *Wild West* - every switch scores 250K and adds 250K to the escrow bounty. Every 10 switch closures advance the award 250K while time remains. Shoot the **VUK** to collect the escrow bounty.

Stagecoach

Stop the runaway Stagecoach before it plummets off the cliff! Ramp Shots move *Maverick* into position and collect a progressive award = 1M per Drop Target + 10M per Ramp Shot as long as time remains.

Poker Championship

Knock down cards on all **Drop Targets** then shoot the **VUK** to collect the *Championship Pot*. **Drop Target Banks** add 1M x number of balls in play to the *Championship Pot*. Completing **Banks** adds 10M x number of balls in play to the pot and resets the **Banks**. Shooting the **Captive Ball** adds 100M to the pot. Balls lost before the timer runs out are returned to the player to be plunged back into play!

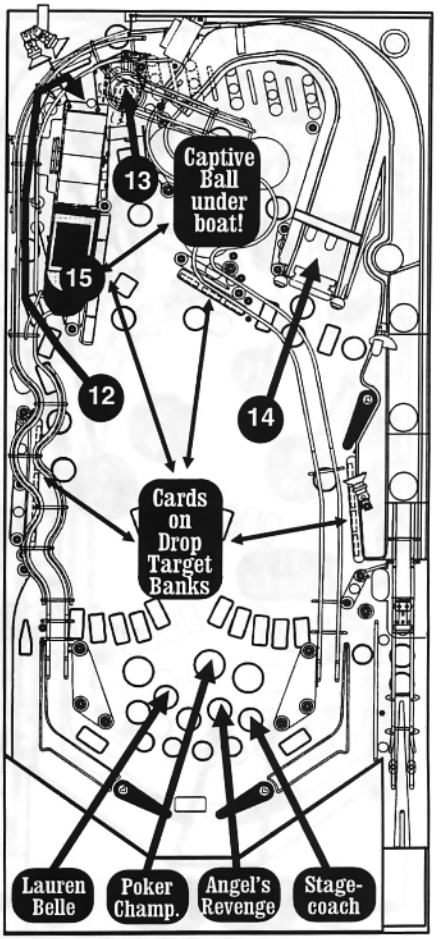

MAVERICK
THE PINBALL
GAME RULES

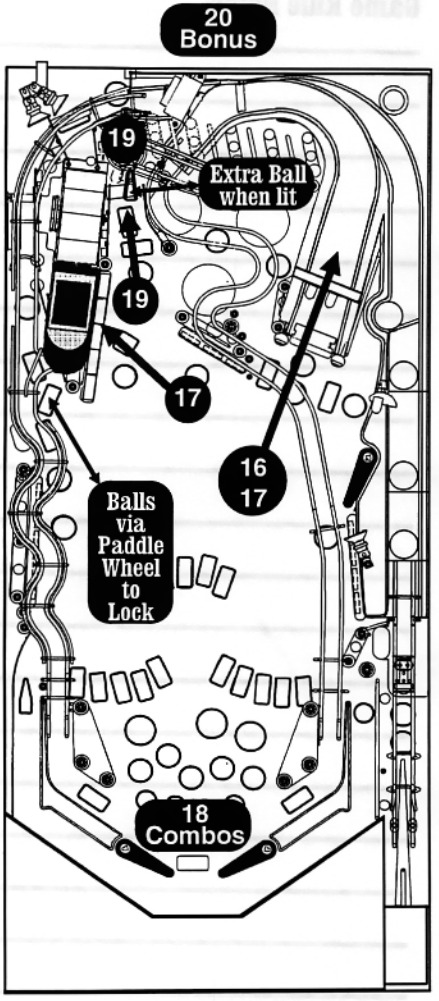

Multiball Features:

Multiball Ready

Shoot the ***Ramp*** to score Jokers - Collecting 3 *Jokers* lights Paddle Wheel for ball lock. Lock balls inside the Riverboat to enable ***Multiball***.

Multiball Jackpots

Shoot Ramp for ***Multball Jackpots***, then complete all Drop Targets to light ***Super Jackpot*** at the ***Ramp***.

Sharpshooting:

Combination Shots

Maverick features several multi-way combos. These combos involve natural sequences of key shots in the game. Several undocumented difficult combos may also be present.

Extra Ball

Extra Ball is collected at the **VUK** whenever lit during game play.

Bonus

End of ***BALL BONUS*** is the sum of:

- ♣ The number of Ramps completed on the Current Ball @ 200K per Ramp.
- ♦ The number of Cards knocked down on the Current Ball @ 200K per card.
- ♠ All Poker Chips won @ 1M per chip times the currently earned bonus multiplier.
- ♥ **BONUS** = [Ramp Shots x 200K + Cards down x 200K + Chips x 1M] x BonusX.

Hint:

Extra Ball Buyin

Pressing the **EXTRA BALL BUYIN BUTTON** at any time during the course of a game activates the *Extra Ball Buyin Feature* at the end of game play.

Once the regular game ends, Extra Ball(s) may be purchased (determined by adjustment 38) for one credit before the Buyin Timer expires. Cancel the *Buyin Feature* by pressing the Start or both Flipper buttons.

Tells

As players become more experienced, they may discover *Maverick's "tells"* hidden features and/or undocumented rules which may give players an even greater advantage when playing the game!

Entering Your Initials

The player may enter their initials if a High Score was achieved by using the Left or Right Flipper Buttons to choose a letter or character as seen on the Video Display. Hitting the Start Button locks the character in. Procede with the 2nd and 3rd letter.

As in the Old West, rules and point values are subject to change without notice! Tell the Sheriff!

Game Rule Notes:

AUDIT FUNCTIONS

General

There are 82 audit functions provided for accounting purposes and for evaluation of game difficulty adjustments. Audit functions are split into two groups. There are 12 most-used audits (1 through 12) in a 'quick look' group and 70 less-used audits (13 through 82), in an 'Expanded' Group. The various auditing functions are summarized in the **GAME AUDIT TABLE** and, when accessed, are shown on the Dot Matrix Display. The *Audit Number* is shown in the top of the display, the *Description* is shown next and the *Audit Total* in the display. Access and control is provided from switches located on the inside of the coin door.

To access audit functions, open the coin door and make sure that the **FORWARD/REVERSE** switch is in the **FORWARD** (up) position. Depress the **STEP** switch and the display indicates **AUDITS & ADJUSTMENTS**. This indicates access to audit functions.

With the **FORWARD/REVERSE** push-button switch still in the **FORWARD** (up) position, depressing the **STEP** push-button switch advances through the audit functions one at a time. To review lower-numbered functions, set the forward/reverse push-button switch to the **REVERSE** (down) position and operate the **STEP** push-button switch.

To access expanded audits, operate the step push-button until **AUDIT 12**, *Expand Audits* is displayed. Set the choice to **YES** as indicated in the lower display by depressing the Game Start push-button and then depress the step push-button. The request is installed and Audit 13 is displayed. When you exit audits and adjustments, the Audit 12 setting is returned to off for the next time that a review of audits are required.

Audit totals may be reset to zero using Game Adjustment, **ADJUSTMENT 10,** *Reset All Audits.* Game adjustments (1 to 12 and 13 to 58) begin after the last audit function (12 or 82). Once audits functions have been recorded, and if no adjustments are required, you may return the game to the attract mode. If adjustments are required, continue pressing the **STEP** button until the game adjustments are reached. See Game Adjustments for details.

Audits - 'Quick Look' Functions

Au. #	Audit Name	Audit Definition
Au. 1	**Total Paid Credits**	The total number of paid credits is displayed.
Au. 2	**Free Game Percentage**	The Total Free Plays (Audit 25) divided by Total Plays (Audit 26).
Au. 3	**Average Ball Time**	(In Seconds) The Total Play Time divided by Total Balls Played (Audit 13).
Au. 4	**Average Game Time**	The Average Game Time expressed in minutes and seconds.
Au. 5	**Coins Thru Left Slot**	The total amount of coins registered through the left slot.
Au. 6	**Coins Thru Right Slot**	The total amount of coins registered through the right slot.
Au. 7	**Coins Thru Center Slot**	The total amount of coins registered through the center slot.
Au. 8	**Coins Thru 4th Slot**	The total amount of coins registered through the fourth slot.
Au. 9	**Total Coins**	The total number of coins dropped through all four coin slots.
Au. 10	**Total Earnings**	The total cash value accumulated since the last Factory Restore occurred.
Au. 11	**Meter Clicks**	Provides the total number of money clicks accumulated, based on the country's lowest coin denomination used for the game credit.
Au. 12	**Expand Audits?**	(On/Off) This audit permits operator to proceed into expanded audits.

Game Audit Table

	Item/Description			Item/Description	
1	TOTAL PAID CREDITS		42	LEFT DRAINS	
2	FREE GAME PERCENTAGE		43	CENTER DRAINS	
3	AVERAGE BALL TIME		44	RIGHT DRAINS	
4	AVERAGE GAME TIME		45	SLAM TILTS	
5	COINS THRU LEFT SLOT		46	TOTAL BALLS SAVED	
6	COINS THRU RIGHT SLOT		47	TOTAL RAMP SHOTS	
7	COINS THRU CENTER SLOT		48	UPPER 5-BANK COMPLETED	
8	COINS THRU 4TH SLOT		49	LOWER 5-BANK COMPLETED	
9	TOTAL COINS		50	3-BANK COMPLETED	
10	TOTAL EARNINGS		51	4-BANK COMPLETED	
11	METER CLICKS		52	TOTAL ORBIT SHOTS	
12	EXPAND AUDITS?		53	SKILL #1: LOCK BALL	
13	TOTAL BALLS PLAYED		54	SKILL #2: START MODE	
14	TOTAL EXTRA BALLS		55	SKILL #3: SUPER POPS	
15	EXTRA BALL PERCENT		56	SKILL: CAPTIVE BALL	
16	REPLAY 1 AWARDS		57	MODE START VIA CHIPS	
17	REPLAY 2+ AWARDS		58	STAGE COACH MYSTERY	
18	TOTAL REPLAYS		59	TOTAL RAISES	
19	REPLAY PERCENT		60	TOTAL FOLDS	
20	TOTAL SPECIALS		61	PAIR COMPLETED	
21	SPECIAL PERCENT		62	3-OF-A-KIND COMPLETED	
22	TOTAL MATCHES		63	STRAIGHT COMPLETED	
23	HIGH SCORE AWARDS		64	FULL HOUSE COMPLETED	
24	HIGH SCORE PERCENT		65	4-OF-A-KIND COMPLETED	
25	TOTAL FREE PLAYS		66	ROYAL FLUSH COMPLETED	
26	TOTAL PLAYS		67	TOTAL HANDS WON	
27	0.0M TO 99.9M		68	HANDS WON VIA RAISE	
28	100.0M TO 199.9M		69	HANDS LOST VIA RAISE	
29	200.0M TO 299.9M		70	TOTAL HANDS PLAYED	
30	300.0M TO 499.9M		71	AVERAGE HANDS PLAYED	
31	500.0M TO 999.9M		72	AVERAGE HANDS WON	
32	1.0B+ SCORES		73	TOTAL BLACKJACKS WON	
33	AVERAGE SCORES		74	TOTAL BLACKJACKS LOST	
34	SERVICE CREDITS		75	MULTIBALL LIT	
35	PROPRIETARY		76	2-BALL MULTIBALL	
36	PROPRIETARY		77	3-BALL MULTIBALL	
37	PROPRIETARY		78	4-BALL MULTIBALL	
38	TOTAL BUYIN GAMES		79	MULTIBALL RESTART	
39	TOTAL EXTRA BALL BUYINS		80	2+ MULTIBALL START	
40	EXTRA BALL BUYIN REPLAYS		81	TOTAL JACKPOTS	
41	EXTRA BALL BUYIN HSTD		82	TOTAL SUPER JACKPOTS	

PHOTOCOPY FOR FIELD AUDIT TRACKING PERFORMANCE

Audits - 'Expanded' Generic Functions

Au.#	Audit Name	Audit Definition
Au. 13	**Total Balls Played**	The total of regular and extra balls.
Au. 14	**Total Extra Balls**	The total number of extra balls awarded.
Au. 15	**Extra Balls Percent**	The Total Extra Balls (Au.14) divided by Total Plays (Au. 26).
Au. 16	**Replay 1 Awards**	The total awards (credit, extra ball, or audit) for level 1.
Au. 17	**Replay 2+ Awards**	The total awards (credit, extra ball, or audit) for level(s) 2 or higher.
Au. 18	**Total Replays**	The total awards (credits, extra balls, or audit only) for exceeding replay score levels.
Au. 19	**Replay Percent**	The Replay Total awards for exceeding replay score levels, Total Replays (Au. 18) divided by Total Plays (Au. 26).
Au.20	**Total Specials**	The total awards (credits, extra balls, or scores) for making specials.
Au. 21	**Special Percent**	The Total Specials (Au. 20) divided by Total Plays (Au. 26).
Au. 22	**Total Matches**	The total credits awarded for matching the last two digits of the score with the system-generated Match Number at the end of the game. Percentage of match credits will be adjustable from 0% to 10%, by Adj. 13 (Match Percentage), if enabled.
Au. 23	**High Score Awards**	The total credits awarded for exceeding the High-Score-To-Date scores.
Au. 24	**High Score Percent**	The High Score Awards (Au. 23) divided by Total Plays (Au. 26).
Au. 25	**Total Free Plays**	The total free credits for replays, High-Score-To-Date, Specials, and Match.
Au. 26	**Total Plays**	The sum of Total Paid Credits (Au.1) and Total Free Plays (Au. 25). Note that free credits are not recorded in the Audit until they are actually used.
Au. 27	**0.0M to 99.9M**	Provides the total number of games the Player's final score was between 0 and 99,999,990 points.
Au. 28	**100.0M to 199.9M**	Provides the total number of games the Player's final score was between 100,000,000 and 199,999,990 points.
Au. 29	**200.0M to 299.9M**	Provides the total number of games the Player's final score was between 200,000,000 and 299,999,990 points.
Au. 30	**300.0M to 499.9M**	Provides the total number of games the Player's final score was between 300,000,000 and 499,999,990 points.
Au. 31	**500.0M to 999.9M**	Provides the total number of games the Player's final score was between 500,000,000 and 999,999,990 points.
Au. 32	**1.0B+ Scores**	Provides the total number of games the Player's final score was over 1,000,000,000 points.
Au. 33	**Average Scores**	Provides the Average Score by adding the Final Score of each game to a table and dividing this sum by the Total Plays (Au. 26).

Audits - 'Expanded' Generic Functions (cont.)

Au.#	Audit Name	Audit Definition
Au. 34	**Service Credits**	Provides the total number of Service credits added to the game. *See Game Diagnostics on page 29 for instructions regarding entry of Service Credits.*
Au. 35, 36, 37	**Proprietary**	Provides information to the game designer to aid in design development (not for consumer use).
Au. 38	**Total Buyin Games**	Provides the number of times a player utilized the Buyin Feature.
Au. 39	**Total Extra Ball Buyins**	Provides the total number of times the Extra Ball Buyin Feature was used.
Au. 40	**Extra Ball Buyin Replays**	Provides the total number of replay awards that resulted from the use of the Total Extra Ball Buyins (Au. 39) Feature.
Au. 41	**Extra Ball Buyin HSTD**	Provides the total number of times in which use of the Extra Ball Buyin Feature resulted from beating the High-Score-To-Date (HSTD).
Au. 42	**Left Drains**	Provides the number of times the ball drained out the left drain.
Au. 43	**Center Drains**	Provides the number of times the ball drained out the center drain.
Au. 44	**Right Drains**	Provides the number of times the ball drained out the right drain.
Au. 45	**Slam Tilts**	Provides the number of times the Slam Tilt switch was activated.
Au. 46	**Total Balls Saved**	Provides the total number of times the Total Balls Saved Feature was used. This feature is enabled at the start of each ball and is disabled as soon as the ball makes contact with 5 game switches or allocated time expired.

Audits - 'Expanded' Game Specific Functions

Au.#	Audit Name	Audit Definition
Au. 47	**Total Ramp Shots**	Provides the total number of times the Right Ramp was scored.
Au. 48	**Upper 5-Bank Completed**	Provides the total number of times that the Upper Left 5-Bank Drop Target was completed.
Au. 49	**Lower 5-Bank Completed**	Provides the total number of times that the Bottom Left 5-Bank Drop Target was completed.
Au. 50	**3-Bank Completed**	Provides the total number of times that the Center 3-Bank Drop Target was completed.
Au. 51	**4-Bank Completed**	Provides the total number of times that the Right 4-Bank Drop Target was completed.
Au. 52	**Total Orbit Shots**	Provides the total number of times the left or right orbits were scored.

Audits - 'Expanded' Game Specific Functions (cont.)

Au.#	Audit Name	Audit Definition
Au. 53	**Skill #1: Lock Ball**	Provides the total number of times the Skill Shot #1 "Lock Ball" Feature was awarded via the Skill Shot #1 Ramp Hole.
Au. 54	**Skill #2: Start Mode**	Provides the total number of times the Skill Shot #2 "Start Mode" Feature was awarded via the Skill Shot #2 Ramp Hole.
Au. 55	**Skill #3: Super Pops**	Provides the total number of times the Skill Shot #3 "Super Pops" Feature was awarded via the Skill Shot #3 Ramp Hole.
Au. 56	**Skill: Captive Ball**	Provides the total number of times the Skill Shot "Captive Ball" Skill Shot was awarded via the Top Ramp Hole via Upper Flipper and shot directly into the Captive Ball behind the Upper Left 5-Bank Drop Targets.
Au. 57	**Mode Start Via Chips**	Provides the total number of times the "Mode Start" Feature was awarded via collection of Chips.
Au. 58	**Stagecoach Mystery**	Provides the total number of times the "Stagecoach Mystery" was awarded from a ramp shot.
Au. 59	**Total Raises**	Provides the total number of times that a hand was raised via a Raise at the VUK.
Au. 60	**Total Folds**	Provides the total number of times that a hand was folded via a Fold at the VUK.
Au. 61	**Pair Completed**	Provides the total number of times a 'Pair' was lit & achieved.
Au. 62	**3-Of-A-Kind Completed**	Provides the total number of times a '3-Of-A-Kind' was lit & achieved.
Au. 63	**Straight Completed**	Provides the total number of times a 'Straight' was lit & achieved.
Au. 64	**Full House Completed**	Provides the total number of times a 'Full House' was lit & achieved.
Au. 65	**4-Of-A-Kind Completed**	Provides the total number of times a '4-Of-A-Kind' was lit & achieved.
Au. 66	**Royal Flush Completed**	Provides the total number of times a 'Royal Flush' was lit & achieved.
Au. 67	**Total Hands Won**	Provides the total number of times a Hand was WON.
Au. 68	**Hands Won Via Raise**	Provides the total number of times a player WON a hand on a Raise.
Au. 69	**Hands Lost Via Raise**	Provides the total number of times a player LOST a hand on a Raise.
Au. 70	**Total Hands Played**	Provides the total number of times a Hand was played.
Au. 71	**Average Hands Played**	Provides the average number of Hands that were played per game.
Au. 72	**Average Hands Won**	Provides the average number of Hands that were won per game.
Au. 73	**Total Blackjacks Won**	Provides the total number of times a Blackjack Hand was won.
Au. 74	**Total Blackjack Lost**	Provides the total number of times a Blackjack Hand was lost.
Au. 75	**Mulitball Lit**	Provides the total number of times the Multiball Feature was lit.
Au. 76	**2-Ball Multiball**	Provides the total number of times the 2-Ball Multiball Feature was awarded.

Audits - 'Expanded' Game Specific Functions (cont.)

Au.#	Audit Name	Audit Definition
Au. 77	**3-Ball Multiball**	Provides the total number of times the 3-Ball Multiball Feature was awarded.
Au. 78	**4-Ball Multiball**	Provides the total number of times the 4-Ball Multiball Feature was awarded.
Au. 79	**Multiball Restart**	Provides the total number of times the Multiball Restart Feature was awarded.
Au. 80	**2+ Multiball Start**	Provides the total number of times that Multiball was started two or more times.
Au. 81	**Total Jackpots**	Provides the total number of times the Jackpot Feature was scored.
Au. 82	**Total Super Jackpots**	Provides the total number of times the Super Jackpot Feature was collected.

Audit Notes

GAME ADJUSTMENTS

General

There are 59 adjustable functions provided to vary difficulty of play and to periodically reset audits and the high score levels. The various game adjustments are summarized in the **Game Adjustments Table** and, when accessed, are shown on the player score display. The *Adjustment Number* is shown in the top of the display, the *Description* is shown next, and the setting, in the bottom of the display. Access and control is provided from switches located on the inside of the coin door.

Game adjustments are accessed from the audit mode. With the audits displaying **AUDIT 1** and the **FORWARD/ REVERSE** switch in the **REVERSE** (down) position, depress the **STEP** switch and **ADJUSTMENT 99** is shown at the top of the display, *Factory Restore* is shown in the middle of the display, and **NO** is shown in the bottom of the display. With the audits displaying **AUDIT 10** or **99**) and the **FORWARD / REVERSE** switch in the **FORWARD** (up) position, depress the **STEP** switch and **ADJUSTMENT 1** is shown in the top of the display, *Replay/Manual* is shown in the middle of the display, and the setting is shown in the bottom of the display.

With the **FORWARD / REVERSE** switch in the **FORWARD** (up) position, depressing the **STEP** switch advances through the game adjustments one at a time. With it in the **REVERSE** (down) position, the **STEP** switch selects lower-numbered adjustments. To rapidly scroll through adjustments, hold the **STEP** switch depressed. Adjustment values are changed by operating the **GAME START** push-button. The **FORWARD / REVERSE** switch setting determines whether the values are increased or decreased. (With the **FORWARD / REVERSE** switch up, the value increases, with it down, the value decreases). When the **STEP** switch is depressed the display indicates **REQUEST INSTALLED**.

Replay And Generic Features

Replays may be adjusted either for fixed levels or for a system-adjusted manual percentage of replay awards. Four levels may be selected. Adjustments allow awarding of a credit or an extra ball as each level is exceeded. With the manual percentage feature, if the actual replay percentage is higher or lower than that desired, the game computes new recommended manual percentage score(s). When the coin door is subsequently opened the player displays indicate the recommended level and a sound is made to alert the operator of a potential change. This new level is entered into adjustments simply by pressing the game start push-button. (If the coin door is closed or you enter audits/adjustments or diagnostics, the replay level is not changed.)

Adjustments - 'Replays'

Adj.#	Adjustment Name	Adjustment Definition
Adj. 1	**Replays: Fixed/Manual**	Adjust for percentage of awards for Replay Levels (1% through 50%). Proceed to Adj. 2 & 3 for Starting Replay Levels. Lower the automatic value to 0% and the display will indicate Fixed. Proceed to Adj. 2 & 3 for Fixed Replay Levels.
Adj. 2	**Starting Replay Score**	Adjust the starting Replay 1setting to between 100M and 9.99M.
Adj. 3	**Replay Levels**	Adjust the number of replay levels to be active (1 to 4). Any additional starting replay levels are automatically set to values higher than Replay 1. Adjust Replay 1 level to between 100M and 9.99M. (Same as Start Replay). If Adj. 3 is set for 2, 3, or 4, adjust Replay 2, 3, or 4 (respectively) level to between 100M & 9.99M.
Adj. 4	**Replay Award**	Set for replays to award: **CREDIT, EXTRA BALL, NONE** or **SPECIAL** (When score threshold is achieved, a Playfield Special is lit.)
Adj. 5	**Free Game Limit**	Adjust the max. # of free games that may be accumulated per game; 0 - 9.
Adj. 6	**Extra Ball Limit**	Adjust the max. # of extra balls that may be accumulated per game; 1- 9 or OFF.

Game Adjustment Table

Adj. Nº	Description	Factory Setting
1	REPLAYS: FIXED/MANUAL	10%
2	STARTING REPLAY SCORE	900M
3	REPLAY LEVELS †	1
4	REPLAY AWARD	Credit
5	FREE GAME LIMIT	5
6	EXTRA BALL LIMIT	3
7	GAME DIFFICULTY †	Mod.
8	GAME PRICING †	USA 7
9	RESET COIN AUDITS	No
10	RESET GAME AUDITS	No
11	RESTORE HIGH SCORES	No
12	EXPAND ADJUSTMENTS?	No
13	MATCH PERCENTAGE	09%
14	BALLS PER GAME	3
15	TILT WARNINGS	1
16	REPLAY BOOST	Yes
17	CREDIT LIMIT	30
18	ALLOW HIGH SCORES	Yes
19	AWARD FOR HIGH SCORE #1	3
20	AWARD FOR HIGH SCORE #2	1
21	AWARD FOR HIGH SCORE #3	1
22	AWARD FOR HIGH SCORE #4	0
23	DEFAULT HIGH SCORE #1	2.4M
24	DEFAULT HIGH SCORE #2	2.1M
25	DEFAULT HIGH SCORE #3	1.95M
26	DEFAULT HIGH SCORE #4	1.8M
27	DEFAULT HIGH SCORE #5	1.65M
28	DEFAULT HIGH SCORE #6	1.5M
29	HSTD RESET COUNT	700
30	FREE PLAY	No

Adj. Nº	Description	Factory Setting
31	CUSTOM MESSAGE	Enable
32	ATTRACT MODE MUSIC	On
33	FLASH LAMP POWER	Normal
34	COIL PULSE POWER	Normal
35	PROPRIETARY	1
36	NEXT GAME PROMOTION	Off
37	BUYIN TYPE	XBall
38	EXTRA BALL BUYIN COUNT	1
39	GAME RESTART	Yes
40	EXTRA BALL PERCENTAGE	25%
41	BACKGROUND MUSIC VOLUME	100%
42	BILL VALIDATOR	No
43	TOURNAMENT MODE	Off
44	EXTERNAL REPLAY KNOCKER	Off
45	SPECIAL MEMORY	Yes
46	LASER KICK CRITERION	0
47	DISCARD COUNT	12
48	PLAYER WINS 21 ON TIE	No
49	MULTIBALL RESTART	Easy
50	QUALIFY JACKPOT	No
51	MULTIBALL DIFFICULTY	Mod.
52	EXTRA BALL MEMORY	Yes
53	RAMP MEMORY	Yes
54	QUALIFYING LOCK RULE	Easy
55	SOFTWARE METER	00
56	LOCATION ID	0
57	GAME ID	0
58	RESET PRINTER?	No
59	PRINTER INTERFACE	Press Start To Print

99	**Factory Restore**	**No**

† Some settings result in Drop-Down Tables. Review the following pages which define all of the above adjustments.

Game Difficulty (Adj. 7)

Adj.#	Adjustment Name	Adjustment Definition
Adj. 7	**Game Difficulty**	Any one of five INSTALL settings for this adjustment may be activated to automatically select settings for multiple adjustments affecting game difficulty. Use the Start button to choose the difficulty level you require and press the step button to activate the setting. After activation, the individual adjustments may be readjusted if desired. Refer to Install Adjustment Table for details.

Set to EXTRA EASY, EASY, FACTORY, HARD or EXTRA HARD.
(*Note*: Additional game features are not adjustable in by the Expanded Adjustments may also change using this setting.)

Install Adjustments	Adj. 7 Extra Easy	Adj. 7 Easy	Adj. 7 Moderate	Adj. 7 Hard	Adj. 7 Extra Hard
(47) Discard Count	14	13	12	11	10
(49) Multiball Restart	EXTRA EASY	EASY	EASY	HARD	EXTRA HARD
(50) Qualify Jackpot	NO	NO	NO	YES	YES
(51) Multiball Difficulty	EXTRA EASY	EASY	MODERATE	HARD	EXTRA HARD
(52) Extra Ball Memory	YES	YES	YES	YES	NO
(53) Ramp Memory	YES	YES	YES	NO	NO

NOVELTY / 5-BALL / ADD-A-BALL SETTINGS

The following three combinations are recommended for situations where local laws restrict certain game features

Novelty Play Rules - Set to establish recommended settings for no free play or extra balls:

Adj.	*Adj. Name*	*Setting*	*Adj.*	*Adj. Name*	*Setting*
1	Replays: Fixed/Manual	Fixed	6	Extra Ball Limit	00
3	Replay Levels	None	13	Match Percentage	Off
4	Replay Award	None	19	Award for High Score #1	03
5	Free Game Limit	00	20	Award for High Score #2	01

regarding the use of replays or the number of balls per game:

5-Ball Play Rules - Set to establish recommended settings for 5-ball play:

Adj.	*Adj. Name*	*Setting*	*Adj.*	*Adj. Name*	*Setting*
1	Replays: Fixed/Manual	07%	6	Extra Ball Limit	03
2	Starting Replay Score	1,500,000,000	13	Match Percentage	04
3	Replay Levels	01	14	Balls Per Game	05
4	Replay Award	Credit	19	Award for High Score #1	03
5	Free Game Limit	05	20	Award for High Score #2	01

Add-A-Ball Settings-To disable awarding of credits and provide awards with an extra ball:

Adj.	*Adj. Name*	*Setting*	*Adj.*	*Adj. Name*	*Setting*
4	Replay Award	Extra Ball	18	Allow High Scores	No
5	Free Game Limit	00	19-22	Award for High Score #1 - #4	00
13	Match Percentage	Off			

Game Pricing (Adj. 8)

There are two methods available for coin switch programming; Standard and Custom. Standard pricing uses a single adjustment (Adj. 8) to select a pricing scheme shown in the **Custom & Standard Pricing Tables**. Custom pricing is used to select additional pricing schemes defined by a Drop Down Menu.

With Adj. 8 set to **CUSTOM** operating the step button again initiates a drop down menu representing coin switch pulses for the left, right, center and fourth coin slots. The prescribed the number of pulses are required for one credit. For example, if *Left Coin Pulses,* was set to 02 and *Coin Switch Pulses Required for 1 Credit*, to 01 a coin in the left slot would produce two credits. Further, if *Left Coin Pulses,* was set to 01 and *Coin Switch Pulses Required for 1 Credit*, to 02, two coins in the left slot would be required for one credit.

Coin Switch Pulses Required for Bonus Credit may be set to post bonus credits when a minimum amount of coins are inserted at one time. For example, if *Left Coin Pulses* was set to 01, *Coin Switch Pulses Required for 1 Credit* to 01 and *Coin Switch Pulses Required for Bonus Credit* to 04, one credit would be posted for each of the first three coins in the left slot and two credits for the fourth coin.

Standard/Custom Pricing - Set for the desired pricing scheme from the Standard Pricing Table as indicated on the dot matrix display. For Custom Pricing, set to **CUSTOM**. When set to CUSTOM, the following adjustments are utilized to tailor each individual coin chute.

Left Coin Switch Pulses - Set the number of pulses registered for closure of the left coin switch; 00 to 99.

Right Coin Switch Pulses - Set the number of pulses registered for closure of the right coin switch; 00 to 99.

Center Coin Switch Pulses - Set the number of pulses registered for closure of the center coin switch; 00 to 99.

4th Coin Switch Pulses - Set the number of pulses registered for closure of the fourth coin switch; 00 to 99.

Coin Switch Pulses Required for 1 Credit - Set the number of coin switch pulses required to post one credit; 00 to 99.

Coin Switch Pulses Required for Bonus Credit - Set the number of coin switch pulses required to award the 1st bonus credit(s); 00 to 99.

Coin Switch Pulses Required for 2nd Bonus Credit - Set the number of coin switch pulses required to award the 2nd bonus credit; 00 to 99.

Credits awarded for 1st Bonus - Set the number of credits awarded for achieving the first Bonus level; 00 to 99.

CUSTOM PRICING TABLE

Coin Mechs					Adjustments							
Left	Right	Center	4th	*Plays/Coins*	Left Pulses	Right Pulses	Mid Pulses	4th Pulses	Pulses /Credit	Pulses /Bonus	Pulses /2nd BONUS	Credit /1st BONUS
25¢	25¢	$1.00	N/U	1/25¢ 3/50¢ 1/25¢ 5/$1.00 1/25¢ 6/$1.00	01 01 05	01 01 05	04 04 20	00 00 00	01 01 04	02 04 20	00 00 00	01 01 01
5*SCH*	10*SCH*	10*SCH*	N/U	1/10 S 1/10 S 4/30 S	01 04	02 08	02 08	00 00	02 06	00 00	00 00	00 00
10*p*	£1	50*p*	20*p*	1/30*p* 2/50*p* 5/£1 1/50*p* 3/£1 1/30*p* 4/£1	01 01 01	15 15 12	06 05 05	02 02 02	03 05 03	00 00 00	00 00 00	00 00 00
20¢	$1.00	N/U	N/U	1/60¢ 2/$1.00	01	05	00	00	03	05	00	01

Standard Pricing Table

Adj. 8 Standard Pricing Select	Coin Mechanisms				Pricing Scheme Explained *Number of "Plays" for Price Amount Shown*			
	Left 1st	Center 2nd	Right 3rd	Right 4th				
USA 1	25¢	$1	25¢		1/25¢			
USA 2	25¢	$1	25¢		1/50¢	2/75¢	3/$1	
USA 3	25¢	$1	25¢		1/50¢			
USA 4	25¢		25¢		1/50¢			
USA 5	25¢	$1	25¢		1/50¢	5/$2		Used to promote Bill Validator
USA 6	25¢	$1	25¢		1/50¢	2/"4X25¢"	3/$1(bill)	
USA 7 ★	25¢	$1	25¢		1/50¢	4/$1.50	6/$2	
Austria	5S	10S	10S		1/10S	2/15S	3/20S	
Australia	20¢	$A 1	$A 2		1/$A 1	3/$A 2		
Australia 2	20¢	$1	$2		1/$1	2/$2		
Belgium	5 BF	20 BF	50 BF		1/20 BF	3/50 BF		
Canada	25¢	25¢	Can$ 1		1/50¢	2/75¢	3/Can$ 1	
Denmark 1	1DKr	5 DKr	10 DKr	20 DKr	1/3 DKr	2/5 DKr		
Denmark 2	1DKr	5 DKr	10 DKr	20 DKr	1/2 DKr	3/5 DKr	7/10 DKr	
Finland	1Fmk	5Fmk			1/3Fmk	2/5Fmk		
France 1 ★	1 Fr	5 Fr	10 Fr	20 Fr	1/3 Fr	2/5 Fr	5/10 Fr	11/20 Fr
France 2	1 Fr	5 Fr	10 Fr	20 Fr	1/5 Fr	3/10 Fr	7/20 Fr	
France 3	1 Fr	5 Fr	10 Fr	20 Fr	1/3 Fr	2/5 Fr	4/10 Fr	9/20 Fr
Germany 1	1DM	2DM	5DM		1/1DM	5/5DM		
Germany 2	1DM	2DM	5DM		1/1DM	6/5DM		
Germany 3 ★	1DM	2DM	5DM		1/2DM	2/3DM	3/4DM	5/5DM
Greece	50Dr		100Dr		1/50Dr	3/100Dr		
Holland (See Netherlands 2)								
Hungary	10 Ft	10 Ft	20 Ft		1/20 Ft	3/40 Ft		
Italy 1	500 Lit		500 Lit		1/500 Lit			
Italy 2	500 Lit		500 Lit		1/1000 Lit	3/2000 Lit		
Japan			100¥		1/100¥	3/200¥		
Korea	100Won		100Won		1/100Won			
Netherlands 1	1 Fls.	1 Fls.	2.5 Fls.		1/1Fls.	3/2.5 Fls.		
Netherlands 2 ★	1 Fls.	2.5 Fls.	5 Fls.		1/1Fls.	3/2.5 Fls.	6/5 Fls.	
New Zealand 1	$NZ 1		$NZ 2		1/$NZ 1	2/$NZ 2		
New Zealand 2	$NZ 1		$NZ 2		1/$NZ 1	3/$NZ 2		
Norway 1	5 NKr		10 NKr		1/5 NKr	2/10 NKr		
Norway 2	5 NKr		10 NKr		1/10 NKr	3/20 NKr		
Spain	100Pts		500Pts		1/100Pts	6/500Pts		
Sweden	1 SKr	5 SKr	10 SKr		1/10 SKr	2/15 SKr	3/20 SKr	
Switzerland 1 ★	1 SwF	2 SwF	5 SwF		1/1 SwF	6/5 SwF		
Switzerland 2	1 SwF	2 SwF	5 SwF		1/1 SwF	3/2 SwF	9/5 SwF	
UK 1	10p	50p	1£	20p	1/50p	3/1£		
UK 2	10p	50p	1£	20p	1/40p	3/1£		
UK 3 ★	10p	50p	1£	20p	1/50p			
Yugoslavia	5 Din		5 Din		1/5 Din			

★ Default Factory Setting.

Additional Generic Features

Adj.#	Adjustment Name	Adjustment Definition
Adj. 9	**Reset Coin Audits**	When enabled (set to **YES**) all coin / paid credit totals will be reset to zero when **STEP** is depressed.
Adj. 10	**Reset Game Audit**	When enabled (set to **YES**) all audit totals except for coins and paid credits will be reset to zero when **STEP** is depressed.
Adj. 11	**Restore High Scores**	When enabled (set to **YES**) the High Score Levels and associated initials will be restored to backup settings when **STEP** is depressed .
Adj. 12	**Expand Adjustments?**	When set to **NO**, depressing the **STEP** push-button advances directly to Adj. 99, ***FACTORY RESTORE***. When set to **YES**, depressing the **STEP** push-button sequences through the expanded adjustments. When exiting from expanded adjustments, this function is reset to **OFF** for the next time that adjustments are required.
Adj. 13	**Match Percentage**	Set Match percent from **00%** to **10%** or **OFF**. At **00%** the match display occurs at the end of the game but never awards a credit.
Adj. 14	**Balls Per Game**	Adjust the number of balls per game; **2** to **5**.
Adj. 15	**Tilt Warnings**	Adjust the number of plumb bob tilt switch closures before the ball in play is tilted; **1, 2, 3** or **OFF.**
Adj. 16	**Replay Boost**	Set to **YES** or **NO**. When set to **YES**, exceeding a replay will set a temporary replay level for each time a replay level is surpassed. This new level will equal the previous replay level (when the replay was awarded) plus 50 Million for each following game, until the replays have all been played. At this time the previous level is resumed.
Adj. 17	**Credit Limit**	Adjust the maximum number of credits that may be posted; **4** to **50**.

There are four of the six high score levels with associated player initials that are displayed during the attract mode. This provides a high-score-to-date feature. When players exceed these levels, the player initials may be entered to replace the previous ones. These levels may be adjusted to award credits and to be reset to backup values after a selected number of games.

Adj. 18	**Allow High Scores**	Set to enable or disable the four high score levels; 00.
Adj. 19	**Credits for High Score #1**	Adjust the number of credits (**0** to **4**) awarded for exceeding level 1 (the highest of the four levels).
Adj. 20	**Credits for High Score #2**	Adjust the number of credits (**0** to **3**) awarded for exceeding level 2.
Adj. 21	**Credits for High Score #3**	Adjust the number of credits (**0** to **2**) awarded for exceeding level 3.
Adj. 22	**Credits for High Score #4**	Adjust the number of credits (**0** to **1**) awarded for exceeding level 4.
Adj. 23 - 28	**Default High Score #1 - #6**	Adjust the score level to which the world record, (level 1) (the highest of the four levels) may be altered. This adjustment is not affected by Adj. 29, *Reset High Score To Date.* Adjust the backup score to which levels 2 - 6 may be reset, respectively.
Adj. 29	**HSTD Reset Count**	HSTD (High Score To Date). Adjust the number of games between automatic resets of high score levels to backup settings and ball time averager adjustments; **100** to **900** or **OFF** (no reset or adjustment).
Adj. 30	**Free Play**	When set to **YES**, no coins are required for games.

Additional Generic Features Continued

Adj.#	Adjustment Name	Adjustment Definition
Adj. 31	**Custom Message**	When desired, this function is used to establish a custom message periodically displayed during the attract mode. Set the feature to **CHANGE** using the Credit button and depress **STEP.** The letter A is indicated in the first position in the display. Vary the letter by operating the left and right flippers. With the desired letter indicated, depress the **CREDIT** button to lock in the letter and advance to the next character. Repeat this procedure until the desired message is completed in the display. Press the **STEP** push-button switch to advance to Attract Mode Music (Adj. 32).
Adj. 32	**Attract Mode Music**	Set to **ON** or **OFF.**
Adj. 33	**Flash Lamp Power**	Set to **NORMAL, DIM** or **OFF.** When set to **NORMAL** the Flash Lamps are active, when **DIM** the Flash Lamps impulse power is reduced by **25%** and when **OFF** the Flash Lamps do not flash.
Adj. 34	**Coil Pulse Power**	Set to **NORMAL, HARD** or **SOFT.** When **HARD** the coil pulse power is increased by **12.5%** of the normal pulse rate. When set to **SOFT** the coil pulse power is reduced by **12.5%** of the normal pulse rate. These adjustments are provided to compensate for Low Line or High Line voltage conditions where the solenoids appear to kicking too weak or too hard.
Adj. 35	**Proprietary**	Provides information to the game designer to aid in design development (not for consumer use).
Adj. 36	**Next Game Promotion**	Set to **ON** or **OFF.** When set to **ON,** the game, in attract mode will randomly display a short promotion for our next game. When set to **OFF,**the game in attract mode will not generate any sounds or graphics referring to the next game.
Adj. 37	**Buyin Type**	Set to **Extra-Ball Buyin.** When set to **EB Buyin,** the game is set to Extra Ball Buyin. When set to **Feature Buyin,** the game is set to Game Buyin. Set to **OFF** to make Buyin Type inoperative.
Adj. 38	**Extra Ball Buyin Count**	**1, 0** or **UNLIMITED.** Default is **1.** Allows the operator to adjust the number of Extra Ball (EB) Buyins allowed after normal game play. See page 5 Extra Ball (EB) Buyin Feature.
Adj. 39	**Game Restart**	Set to **YES** or **NO.** When set to **YES,** a new game may be started during any ball after the first ball is completed. (Note-Pressing start during the first ball will add additional players.) When set to **NO,** the game disables the start button after the first ball until the final ball is in play.
Adj. 40	**Extra Ball Percentage**	Set from **0** to **50.** Allows the operator to adjust how frequently the Extra Ball feature is made available to the player.
Adj. 41	**Background Music Volume**	Set to **0, 25, 50, 75** or **100** percent. Allows the operator to adjust the background music volume independently from the normal game sounds.
Adj. 42	**Bill Validator**	Set to **YES** or **NO.** When set to **YES ,** the display, in game attract mode, will show an "*Insert Bill Animation*". When set to **NO,** the display, in game attract mode will show "*Insert Coin Animation*".

Additional Generic & Game Specific Features (Adj. 45-48)

Adj.#	Adjustment Name	Adjustment Definition
Adj. 43	**Tournament Mode**	Set to **NONE, PINBALL EXPO, IFPA-PAPA** or **HOME**. This function determines the default conditions to quickly prepare a game for tournament play. When this setting is changed all audits will be reset and all adjustments will be initiated to the particular style selected. The game will then return to game over attract mode, as if a Factory Restore had been performed. **NONE** - Same as a Factory Reset conditions. **IFPA**-Straight 50¢ play, no replay, no Extra Ball, no High Scores, 2 Tilt Warnings and No Match. **PINBALL EXPO-PAPA**-Same as **IFPA** settings except Free Play is enabled. **HOME**-Sets game for Free Play, extra ball play, no replay, **10%** Match & Extra Ball percent **30%**.
Adj. 44	**External Replay Knocker**	Set to **ON** or **OFF**. When set to **ON**, the operator can enable the knocker in the cabinet to drive an external device without the game giving a replay.
Adj. 45	**Special Memory**	Set to **YES** or **NO**. When set to **YES**, the lit 'Special' light will be retained in memory from ball to ball for the same player. When set to **NO**, the lit 'Special' light will go out at the end of each ball.
Adj. 46	**Laser Kick Criterion**	Determines how the Laser Kick can be reset during game play.
Adj. 47	**Discard Count**	Provides the operator with the total number of discard cards.
Adj. 48	**Player Wins 21 on Tie**	Set to **YES** or **NO**. When set to **YES**, the player wins 21 on a tie.
Adj. 49	**Multiball Restart**	Set to **EXEASY, EASY, MODERATE, HARD** or **EXHARD**. Default is **EASY**. Determines how Multiball can restart.
Adj. 50	**Qualify Jackpot**	Determines how the Jackpot is lit.
Adj. 51	**Multiball Difficulty**	Determines how Multiball Difficulty is achieved.
Adj. 52	**Extra Ball Memory**	Set to **YES** or **NO**. When set to **YES**, the lit 'Extra Ball' light will be retained in memory from ball to ball for the same player. When set to **NO**, the lit 'Extra Ball' light will go out at the end of each ball.
Adj. 53	**Ramp Memory**	Set to **YES** or **NO**. When set to **YES**, the 'Completed Number of Ramps' will be retained in memory from ball to ball for the same player to achieve set awards. When set to **NO**, the 'Completed Number of Ramps' will be reset at the end of each ball.
Adj. 54	**Qualifying Lock Rule**	Set to **EXEASY, EASY, MODERATE, HARD** or **EXHARD**. Default is **EASY**. Determines the number of Ramps needed to lite Lock(s).
Adj. 55	**Software Meter**	Provides the operator with the total number of Meter Clicks.
Adj. 56 Adj. 57	**Location ID & Game ID**	**0** to **9999**. Allows the operator to assign a location or game identification (respectively) number to the audit print-out sheet. (Will not be affected by Factory Restore.)
Adj. 58	**Reset Printer?**	Provides the operator with the ability to reset the printer option.
Adj. 59	**Printer Interface**	Allows the operator to print by pressing the Start Button.
Adj. 99	**Factory Restore**	Allows the operator to reset all adjustments to the factory settings.

GAME DIAGNOSTICS

Please note: If the Display Reads "**OPEN THE DOOR**," this indicates a faulty memory condition in RAM. Opening the Coin Door will initiate a Factory Restore, by opening the Memory Protect Switch. Check battery voltage at CMOS RAM with power off.

The Data East Pinball system provides tests for sounds, digital displays, lamps, switches, and solenoids. Each feature may be tested manually or automatically using the **STEP** and **FORWARD/REVERSE** push-button switches inside the coin door and the white "Clear Ticket" button located next to the Diagnostic Switchs. The automatic tests may be used for a quick verification of automatic test functions and the manual tests, for troubleshooting.

During game play, activation of switches and operation of coils with associated switches are monitored. If a switch is not made for 50 games it is considered faulty. When operation of a coil should close or open a switch and does not, the coil is considered faulty. In Game Over Attract Mode, faulty switches and coils (if any) are reported (See Tech Alert description below). Note that reporting of an unused switch does not constitute a problem and that a bad coil could mean that the associated switch requires adjustment.

Wiring to switches, solenoids and controlled lamps uses color-coded wires that basically follows a resistor color-code scheme for the eight rows and eight columns. During the switch tests and during the discrete lamp test, identification of the color of the row and column wires are indicated in the Dot Matrix Display. For example, making the right coin switch during the Switch Test results in the switch functional name (RIGHT COIN), the row (WHT-YEL) and column (GRN-BRN) wire color codes, and the switch number are shown in the display.

Color Abbreviations Used:

0	**BLK** = BLACK	**3**	**ORN** = ORANGE	**6**	**BLU** = BLUE	**9**	**WHT** = WHITE
1	**BRN** = BROWN	**4**	**YEL** = YELLOW	**7**	**VIO** = VIOLET		
2	**RED** = RED	**5**	**GRN** = GREEN	**8**	**GRY** = GREY		

Additional Abbreviations/Acronyms Used:

X	"Times" (Multiplier)	**P/F**	Playfield	**D.T.**	Drop Target(s)
LT	Left	**S-U**	Stand-Up (Targets)	**PPB**	Playfield Power Board
RT	Right	**Au.**	Audit(s)	**SSFB**	Solid State Flipper Board
BOT	Bottom	**Adj.**	Adjustments	**PSB**	Power Supply Board
MID	Middle	**G.I.**	General Illumination	**SMB**	Shaker Motor Board
CT	Center	**R/O**	Roll-Over (Switches)	**N.C.**	"Normally Closed"

Entering Diagnostics

With the game in the game-over mode, open the coin door and make sure that the **FORWARD/REVERSE** push-button switch is set to **REVERSE** (down) and depress the **STEP** push-button switch. The Player displays will show the toll-free Customer Service number 1-800-KICKERS, that is 1-800-542-5377 (U.S. including Illinois) and the toll number (708) 345-7700 (Outside the United States). This indicates entry into game diagnostics.

Service Credits

With the phone number displayed depress the **STEP** push-button switch. The game now gives the technician the option of adding 1 to 5 service credits. These credits allow the technician to test-play the game without adding any counts to the coin audits (Au. 01 & Au. 05 - 08). When the message appears, press and hold the Game Start pushbutton until the desired number of credits are shown on the display. Then press the step button again to add these credits to the game and enter Tech Alert. If no Service Credits are desired, press the step button with the initial message displayed.

Tech Alert

The display will now indicate if there are any faulty switches (i.e., Switches that are normally closed but remain open or open switches that have not been closed (activated) in 50 games.

Easy Trough Clear

Pressing the step button again displays the **EASY TROUGH CLEAR** message and instructs the technician to operate either flipper button to easily remove the balls from the trough. This is provided to allow the technician a simple method of removing the balls from the trough prior to entering the Active Switch Test , thereby reducing the number of switches closed. Also, to test functionality of trough, ensure proper trough operation.

Burn-In Minutes

Pressing the step button while in Tech Alert mode will step game into Burn-in Mode (Factory use). At this stage pressing the game start button will cause the game to exercise all CPU I/O functions. This is provided to constantly exercise sounds, solenoids, etc...

To stop the test press the start button again. Cumulative Burn-In minutes will be displayed. To reset Burn-In minutes to 00, you must perform an Audit Reset (Adj. 10) or a Factory Restore (Adj. 99).

Sound Tests

The Data East Pinball sound system produces true digital stereo sound on left and right speakers and mono on a center speaker. During Sound tests, the bottom display shows the sound board circuit under test and the corresponding sounds are selected by operating the left and right flipper buttons to choose the circuit to be tested. Now press the start button to initiate the sound. Refer to the Sound Test Chart for the sound circuits displayed and the sounds produced.

The sound functions allow verification that all channels are functioning properly and that the speaker connections are correct. Speaker Phase Testing procedures follow for checking speaker connections.

Sound Test Chart

Auto/Manual Tests	Sounds Produced	Auto/Manual Tests	Sounds Produced
Left Speaker	LEFT SINE	Voice Rom3 (Loc U36)	NOT USED
Both Lt & Rt Speakers	CENTER SINE	Voice Rom4 (Loc U37)	NOT USED
Right Speaker	RIGHT SINE	Music Test (Sound Rom, Loc U7)	LEVEL 1-3 MUSIC
Voice Rom1 (Loc U17)	SPEECH PATTERN 1		

Speaker Phase Testing

Connections to each of the three speakers are polarized and each must be connected appropriately for the best quality sound. If one speaker has the positive and negative connections reversed with respect to the other two, bass frequencies will not be produced properly and the overall sound quality will be poor.

To test for proper speaker phasing, use the sound test to cycle through the Left, Center, and Right Sine functions. If the Center Sine produces more volume and bass than the Left and Right Sines, the speakers are connected properly. If it produces the same or less, one speaker is connected improperly. To isolate and correct reversed speaker connections, one of two methods may be used.

1. Check each speaker for polarity markings. If the speakers have polarity markings, verify that the single-color wire (BLK, YEL or RED) is connected to the negative (-) terminal.

2. Disconnect the speaker output connector from the Sound Board and connect a 1.5-volt battery across each speaker pair one at a time while observing the speakers. Make sure the positive battery terminal is connected to the positive lead (CN1- Pin 1, 3 or 6) each time. As the connection is made, check speaker cone movement; proper connections are indicated by outward movement.

Digital Display Test

The Digital display utilizes a Dot Matrix Display Control board mounted in piggyback fashion to the display driver Board. The purpose behind this board is to provide more information (192 X 64 Dots) to the operator as well as displaying graphics to the player.

The board is controlled by a 68B09E microprocessor and its personality ROMs (Unique to the Game) . It receives Data, Reset & Clock information from the CPU Board via the ribbon cable and sends back multiple Status and Busy signals to the CPU. This is to insure synchronized communication between the CPU and the Display Controller board.

The Drivers for the rows and columns are provided on 4 surface mounted integrated circuits on the Display driver board.

Dot Matrix Display Test

To enter Dot Matrix Display Test, operate the STEP push-button switch from the Sound Manual test. The display will immediately illuminate one vertical column of dots, turning it off and illuminating the next column, until each column has been individually lit, while the other columns are off. It will make one pass. The display will then illuminate the top horizontal row of dots, and test by lighting the row of the display, then turning it off and iluminating the next row, until each row has been indivudally lit, while the other rows are off. The test will then illuminate all the dots in the display, except for one column. It will cycle this blank column from left to right for one pass. The display will then again illuminate all the dots except for the top row, and then turning it on and blanking the next row, until each row has been individually blanked, while the other rows are on. It will cycle this blank row for one pass. The next test begins with every other dot lit, in both the rows and columns. These dots then go out, and the unlit dots light, resulting in an alternating checkerboard pattern for approximately 4 seconds. An intensity test is also displayed at 30%, 70% & 100% brightness. The test will repeat these cycles indefinitely until advanced to the next test or until the power is removed. (Please Note: These tests may be interrupted at any time by operating the STEP push-button switch to advance to the next test.)

Laser Kick Test

This test is provided to insure proper interaction between certain switches and their associated solenoids without entering game play. For example, by rolling the ball over the left outlane switch, the Laser Kick should fire. If it kicks too early or too late, the switch actuator should be adjusted to compensate for this error. If it fails to fire, use the switch test or coil test to help determine the cause of the failure. (Note: During this function, similar tests may be performed on the Vertical Up Kickers or Ejects in the game.)

SWITCH TESTS

Switches are configured in an 8 x 8 matrix of columns (switch drives) and rows (switch returns) with up to 64 switches possible. The switch tests include three parts; switch test, active switches, and bad switches. Column and Row wire colors are indicated in each test using corresponding resistor color code numbers.

Switch Test

To initiate, push the STEP push-button switch, until the display indicates **SWITCH TEST**. Close each switch and observe the display. The display will indicate the switch name, column wire colors, row wire colors and the switch number. When a switch is released, the name and number disappear until another switch is closed or the test is exited.

Active Switches

Push the STEP push-button switch from the Switch Test. The display will indicate **ACTIVE SWITCHES**. If any switches are stuck closed (or made from the presence of a ball), the display sequences through switch names, and indicates the row and column wire colors, and the switch numbers are indicated in the display. This cycle continues until all switches are cleared or until the STEP push-button switch is depressed.

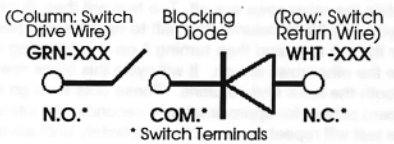

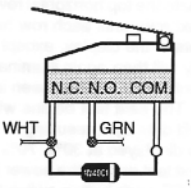

Diode 1N4001

SWITCH MATRIX CHART

Column (Drive) / Row (Return)	1 Q55 GRN-BRN CN8-1	2 Q54 GRN-RED CN8-2	3 Q53 GRN-ORN CN8-3	4 Q52 GRN-YEL CN8-4	5 Q51 GRN-BLK CN8-5	6 Q50 GRN-BLU CN8-7	7 Q49 GRN-VIO CN8-8	8 Q48 GRN-GRY CN8-9
1 WHT-BRN CN10-9	Plumb Tilt 1	Not Used 9	Lower Left 5-Bank D.T. Bottom 10♠ 17	Upper Left 5-Bank R/O D.T. Bottom 3♠ 25	Right 4-Bank D.T. Bottom 9♠ 33	Left Turbo Bumper 41	Right Outlane 49	Left Outlane 57
2 WHT-RED CN10-8	4th Coin 2	Not Used 10	Lower Left 5-Bank D.T. Lwr. Middle J♠ 18	Upper Left 5-Bank R/O D.T. Lwr. Mid. 4♠ 26	Right 4-Bank D.T. Lwr. Middle 9♦ 34	Center Turbo Bumper 42	Right Ramp Left S-U Target 50	Right Ramp Right S-U Target 58
3 WHT-ORN CN10-7	Credit Button 3	#1 (Left) Ball Trough 11	Lower Left 5-Bank D.T. Middle Q♠ 19	Upper Left 5-Bank R/O D.T. Middle 5♦ 27	Right 4-Bank D.T. Upr. Middle 9♣ 35	Right Turbo Bumper 43	Right Slingshot 51	Left Slingshot 59
4 WHT-YEL CN10-6	Right Coin 4	#2 Ball Trough 12	Lower Left 5-Bank D.T. Upr. Middle K♠ 20	Upper Left 5-Bank R/O D.T. Upr. Mid. 6♠ 28	Right 4-Bank D.T. Top 9♥ 36	Right Ramp Enter Gate 44	RT Ramp Kick Big Bottom 52	Right Orbit Roll-over Sw. 60
5 WHT-GRN CN10-5	Center Coin 5	#3 Ball Trough 13	Lower Left 5-Bank D.T. Top A♠ 21	Upper Left 5-Bank R/O D.T. Top 7♠ 29	Top Lane Left 37	Paddle Wheel Front Lock OPTO 45	RT Ramp Skill Shot 1 53	Left Orbit Rollunder 61
6 WHT-BLU CN10-3	Left Coin 6	#4 Ball Trough 14	Center 3-Bank D.T. Left 8♣ 22	Captive Ball S-U Target 30	Top Lane MID LT 38	Paddle Wheel Back Lock OPTO 46	RT Ramp Skill Shot 2 54	Left Return Lane 62
7 WHT-VIO CN10-2	Slam Tilt 7	#5 (Right) Ball Trough 15	Center 3-Bank D.T. Middle 8♦ 23	VUK 31	Top Lane MID RT 39	Right Return Lane 47	RT Ramp Skill Shot 3 55	Left Flipper Lower 63
8 WHT-GRY CN10-1	Extra Ball Button 8	Shooter Lane 16	Center 3-Bank D.T. Right 8♥ 24	Upper RT Ramp Exit Gate 32	Top Lane Right 40	Not Used 48	Paddle Wheel Entrance (on P/F) OPTO 56	Right Flipper Upr./Lwr. 64

Switch Matrix Locations, Descriptions & Switch Part Numbers†

Switch Matrix No. & Description		Part No.
01*	Plumb Tilt (See Item 17, Cabinet Parts, Page 41)	
02*	4th Coin (On Coin Door)	---
03*	Credit Button (Left of Coin Door)	500-5097-02
04*	Right Coin (On Coin Door)	180-5024-00
05*	Center Coin (On Coin Door)	180-5024-00
06*	Left Coin (On Coin Door)	180-5024-00
07*	Slam Tilt	180-5022-00
08*	Extra Ball Button (Under 03)	180-5073-00
09	Not Used	---
10	Not Used	---
11	#1 (Left) Ball Trough	180-5119-00
12	#2 Ball Trough	180-5119-00

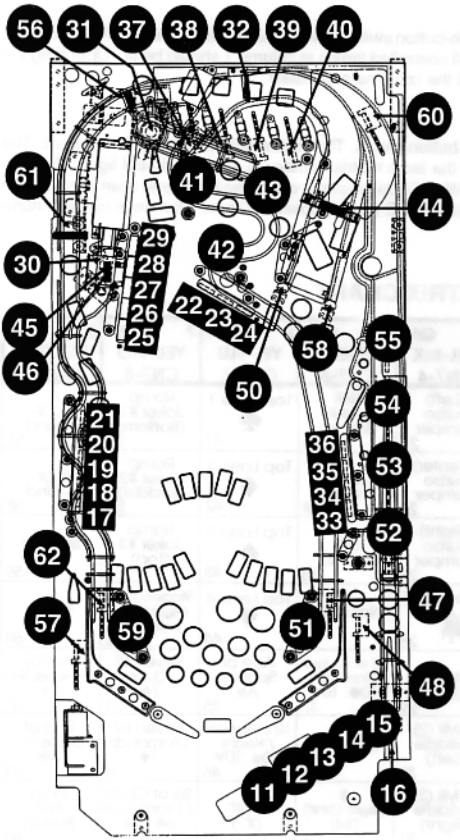

Switch Matrix No. & Description		Part No.
13	#3 Ball Trough	180-5119-00
14	#4 Ball Trough	180-5119-00
15	#5 (Right) Ball Trough	180-5118-00
16	Shooter Lane	180-5100-01
17	Lower Left 5-Bank D.T. Bottom 10♠	180-5104-00
18	Lower Left 5-Bank D.T. Lwr. MID J♠	180-5104-00
19	Lower Left 5-Bank D.T. Middle Q♠	180-5104-00
20	Lower Left 5-Bank D.T. Upr. MID K♠	180-5104-00
21	Lower Left 5-Bank D.T. Top A♠	180-5104-00
22	Center 3-Bank D.T. Left 8♣	180-5104-00
23	Center 3-Bank D.T. Middle 8♦	180-5104-00
24	Center 3-Bank D.T. Right 8♥	180-5104-00
25	Upr. LT 5-Bank Rollover D.T. BOT 3♠	180-5104-00
26	Upr. LT 5-Bank R/O D.T. Lwr. MID 4♠	180-5104-00
27	Upr. LT 5-Bank R/O D.T. Middle 5♦	180-5104-00
28	Upr. LT 5-Bank R/O D.T. Upr. MID 6♠	180-5104-00
29	Upr. LT 5-Bank Rollover D.T. Top 7♠	180-5104-00
30	Captive Ball Stand-Up Target	515-5967-08
31	Vertical Up-Kicker (VUK)	180-5116-00
32	Upper Right Ramp Exit Gate	180-5087-00
33	Right 4-Bank Drop Target Bottom 9♠	180-5104-00
34	Right 4-Bank D.T. Lower Middle 9♦	180-5104-00
35	Right 4-Bank D.T. Upper Middle 9♣	180-5104-00
36	Right 4-Bank Drop Target Top 9♥	180-5104-00
37	Top Lane Left	500-5707-00
38	Top Lane Middle Left	500-5707-00
39	Top Lane Middle Right	500-5707-00
40	Top Lane Right	500-5707-00
41	Left Turbo Bumper	180-5015-01
42	Center Turbo Bumper	180-5015-01
43	Right Turbo Bumper	180-5015-01
44	Right Ramp Entrance Gate	180-5090-00
45	Paddle Wheel Transmitter Front Lock OPTO Receiver	520-5102-00 520-5103-00
46	Paddle Wheel Transmitter Back Lock OPTO Receiver	520-5102-00 520-5103-00
47	Right Return Lane	500-5706-00
48	Not Used	---
49	Right Outlane	500-5706-00
50	Right Ramp Left Stand-Up Target	515-5967-08
51	Right Slingshot	180-5054-00
52	Right Ramp Kick Big Bottom	500-5706-00
53	Right Ramp Skill Shot 1	500-5706-00
54	Right Ramp Skill Shot 2	500-5706-00
55	Right Ramp Skill Shot 3	180-5126-00
56	Paddle Wheel Transmitter Entrance OPTO Receiver	520-5102-00 520-5103-00
57	Left Outlane	500-5707-00
58	Right Ramp Right Stand-Up Target	515-5967-08
59	Left Slingshot	180-5054-00
60	Right Orbit Rollover	500-5707-00
61	Left Orbit Rollunder	180-5090-00
62	Left Return Lane	500-5707-00
63*	Lower Left Flipper Cabinet via Q7 (Transistor) on SSFB	180-5124-00
64*	Lower & Upper Right Flipper Cabinet via Q5 (Transitor) on SSFB	180-5124-00

* Location - In Cabinet

† Specify Game Nº (31) & decal description if applicable.

LAMP TESTS

Controlled lamps are configured in an 8 x 8 matrix of columns (lamp drives) and rows (lamp returns) with up to 64 lamps possible. The lamp tests include four parts, all lamps, lamp return (row), lamp drive (column), and discrete (individual) lamps. Row and column wire colors are indicated in the discrete lamp test using corresponding resistor color code numbers.

All Lamps

From the Active Switch test, operate the STEP push-button switch. The dot matrix display will indicate ALL LAMPS and all controlled lamps will light.

Lamp Returns (Row)

From the ALL LAMPS test, depress the STEP push-button switch. The display indicates LAMP RETURNS, wire color and the LAMP RETURN driver transistor. All controlled lamps in row 1 should be lit. Operating the Game Start push-button switch cycles through each of the rows separately.

Lamp Drives (Column)

From the LAMP RETURNS test, depress the STEP push-button switch. The display will indicate LAMP COLUMNS, wire color and the LAMP DRIVES driver transistor. All controlled lamps in column 1 should be lit. Operating the Game Start push-button switch,cycles through each of the columns separately.

Single Lamp

From the LAMP DRIVES test, depress the STEP push-button switch. The display will indicate the lamp name. The display indicates the row and column wire colors and the lamp matrix number. Lamp 01 should light. With the FORWARD/REVERSE push-button switch in the FORWARD (up) position, operating the Game Start push-button switch selects higher-numbered lamps; with it in the REVERSE (down) position, Game Start selects lower-numbered lamps.

LAMP MATRIX CHART

Column 18V / Row GND	1 Q71 YEL-BRN CN7-1	2 Q70 YEL-RED CN7-2	3 Q69 YEL-ORN CN7-3	4 Q68 YEL-BLK CN7-4	5 Q67 YEL-GRN CN7-6	6 Q66 YEL-BLU CN7-7	7 Q65 YEL-VIO CN7-8	8 Q64 YEL-GRY CN7-9
1 Q72 RED-BRN CN6-1	Bank Heist (Captive Ball) 01	Shoot Again 09	21 (When Lit) 17	(Left) Turbo Bumper 25	Skill Shot #1 Bottom 33	Top Lane 1 ♣ 41	Ramp Joker #1 (Bottom) 49	4-Of-A-Kind 57
2 Q73 RED-BLK CN6-2	Two of Hearts 2♥ 02	Lock #3 10	Poker Championship 18	(Center) Turbo Bumper 26	Skill Shot #2 34	Top Lane 2 ♦ 42	Ramp Joker #2 (Middle) 50	3-Of-A-Kind 58
3 Q74 RED-ORN CN6-3	Three of Hearts 3♥ 03	Special 11	Lock #2 19	(Right) Turbo Bumper 27	Skill Shot #3 35	Top Lane 3 ♠ 43	Ramp Joker #3 (Top) 51	Straight 59
4 Q75 RED-YEL CN6-5	Four of Hearts 4♥ 04	Jackpot (Right Ramp Enter Right) 12	Coop's Cash 20	Lock #1 28	Not Used 36	Top Lane 4 ♥ 44	Stagecoach (Right Ramp Enter Left) 52	Royal Flush 60
5 Q76 RED-GRN CN6-6	Five of Hearts 5♥ 05	Not Used 13	Lauren Belle 21	5 Mil (1) (Left) 29	10 of Clubs / Diamonds 10♣ 10♦ 37	Ace of Spades A♠ 45	Seven of Clubs 7♣ 53	Two of Diamonds S-U 2♦ 61
6 Q77 RED-BLU CN6-7	Six of Hearts 6♥ 06	Spot Card (Left) 14	Bank Heist 22	5 Mil (2) (Middle Left) 30	Extra Ball 38	10 of Spades / Hearts 10♠ 10♥ 46	Seven of Diamonds 7♦ 54	Two of Clubs S-U 2♣ 62
7 Q78 RED-VIO CN6-8	Jack of Spades J♠ ('21') 07	Spot Card (Right) 15	Angel's Revenge 23	5 Mil (3) (Middle Right) 31	$ (Right Orbit) (#4) 39	$ (VUK) (#2) 47	Six of Clubs / Diamonds 6♣ 6♦ 55	Extra Ball Button 63
8 Q79 RED-GRY CN6-9	Raise/ Fold 08	1 (One) Pair 16	Stage Coach 24	5 Mil (4) (Right) 32	$ (Ramp Enter) (#3) 40	$ (Left Orbit) (#1) 48	Seven of Hearts 7♥ 56	Start Button 64

Lamp Matrix Location and Descriptions

Lamp Matrix No.	Description
01	Bank Heist (Captive Ball)
02	Two of Hearts 2♥
03	Three of Hearts 3♥
04	Four of Hearts 4♥
05	Five of Hearts 5♥
06	Six of Hearts 6♥
07	Jack of Spades J♠ ("21")
08	Raise / Fold
09	Shoot Again
10	Lock #3 (Joker)
11	Special
12	Jackpot (RT Ramp Enter Right)
13	Not Used
14	Spot Card (Left)
15	Spot Card (Right)
16	1 (One) Pair
17	21 When Lit
18	Poker Championship
19	Lock #2 (Joker)
20	Coop's Cash
21	Lauren Belle
22	Bank Heist
23	Angel's Revenge

Lamp Matrix No.	Description
24	Stage Coach
25	(Left) Turbo Bumper
26	(Center) Turbo Bumper
27	(Right) Turbo Bumper
28	Lock #1 (Joker)
29	5 Mil (1) (Left)
30	5 Mil (2) (Middle Left)
31	5 Mil (3) (Middle Right)
32	5 Mil (4) (Right)
33	Skill Shot #1 (Bottom)
34	Skill Shot #2 (Center)
35	Skill Shot #3 (Top)
36	Not Used
37A	Ten of Clubs 10♣
37B	Ten of Diamonds 10♦
38	Extra Ball
39	$ (Right Orbit) (#4)
40	$ (Ramp Enter) (#3)
41	Top Lane 1 ♣
42	Top Lane 2 ♦
43	Top Lane 3 ♠
44	Top Lane 4 ♥
45	Ace of Spades A♠

Lamp Matrix No.	Description
46A	Ten of Spades 10♠
46B	Ten of Hearts 10♥
47	$ (VUK) (#2)
48	$ (Left Oribt) (#1)
49	Ramp Joker #1 (Bottom)
50	Ramp Joker #2 (Middle)
51	Ramp Joker #3 (Top)
52	Stagecoach (Right Ramp Enter Left)
53	Seven of Clubs 7♣
54	Seven of Diamonds 7♦
55A	Six of Clubs 6♣
55B	Six of Diamonds 6♦
56	Seven of Hearts 7♥
57	4-Of-A-Kind
58	3-Of-A-Kind
59	Straight
60	Royal Flush
61	Two of Diamonds 2♦ (Stand-Up Right)
62	Two of Clubs 2♣ (Stand-Up Left)
63*	Extra Ball Button (Front of Cab.)
64*	Start Button (Front of Cabinet)

Please Note:
General Illumination (G.I.) Lamps are not shown.
For Bulb Types & Sockets, see pages 46 & 47

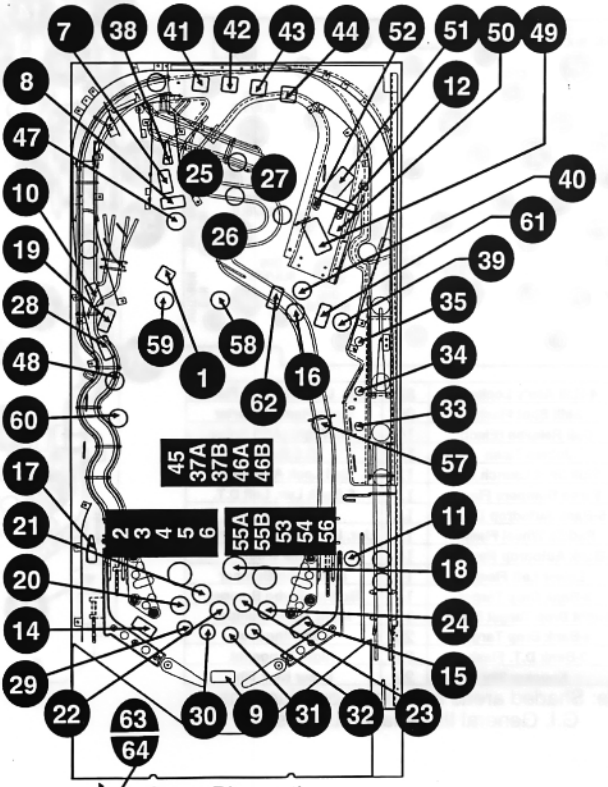

FLASH LAMP / COIL TESTS

Twenty-Two regular (pulsed under microprocessor control) coil drivers are provided to switch ground to coils. The Left/Right relay is used in conjunction with drives 1 through 8 to switch +32 volts between coils or flash lamps; these sets are termed "left" and "right". This relay is located on the PPB board which provides isolation diodes and current limiting resistors. This effectively provides 29 regular coils.

Flash Lamp	From the Single Lamp test, depress the **STEP** push-button switch. All Flash lamps will fire randomly. This allows the Technician to easily spot any burned out bulbs and replace them without stepping through the tests below.
Automatic Test	From the Flash Lamps test, depress the **STEP** push-button switch. The dot matrix display will indicate **ALL COILS**. The test pulses each regular solenoid or flash lamp sequentially with the coil/flash lamp names and the wire colors indicated in the display.
Select Coil	From the Coil Test, depress the **STEP** push-button switch. The display will indicate **SELECT COIL** and then the name of 1st drive and the wire colors. Operate either Flipper push-button switch to select the coil or flash lamp to be tested. With the desired drive number indicated in thedisplay, depress the **START** push-button switch to cause it to be pulsed repeatedly.
Return To Game Over	From the Select Coil test, depress the **STEP** push-button switch once. The game returns to the game-over mode.

Backbox Flash Lamps

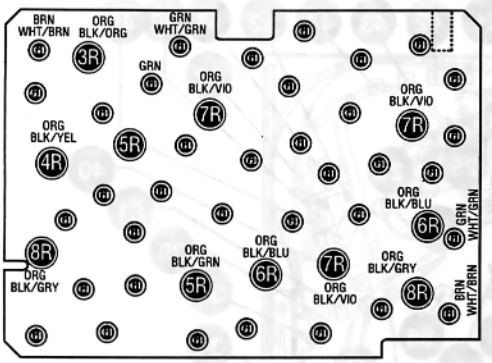

1L	4-Ball Ass'y Lockout	8R	Lwr. LT 5-Bank DT Flash
1R	Skill Shot Flash	09	Platic Ramp Diverter
2L	Ball Release (Eject)	10	Left/Right (A/B) Relay
2R	Jokers Flash	11	G.I. Relay
3L	Skill Shot Launch 50v	12	Ball Lock Assembly
3R	Turbo Bumpers Flash	13	5-Bank Lwr. Left D.T.
4L	5-Bank Autodrop Down	14	Upper VUK 50v
4R	Paddle Wheel Flash	15	Upr. Left Ball Deflector 50v
5L	5-Bank Autodrop Reset Up	16	Paddle Wheel
5R	Lower Left Flash	17	Left Turbo Bumper
6L	3-Bank Drop Target	18	Bottom Turbo Bumper
6R	Right Drop Target Flash	19	Right Turbo Bumper
7L	4-Bank Drop Target	20	Left Slingshot
7R	3-Bank D.T. Flash	21	Right Slingshot
8L	Knocker 32v	22	Laser Kick 50v

Note: Shaded areas not shown on Diagrams.
G.I. General Illumination Lamps

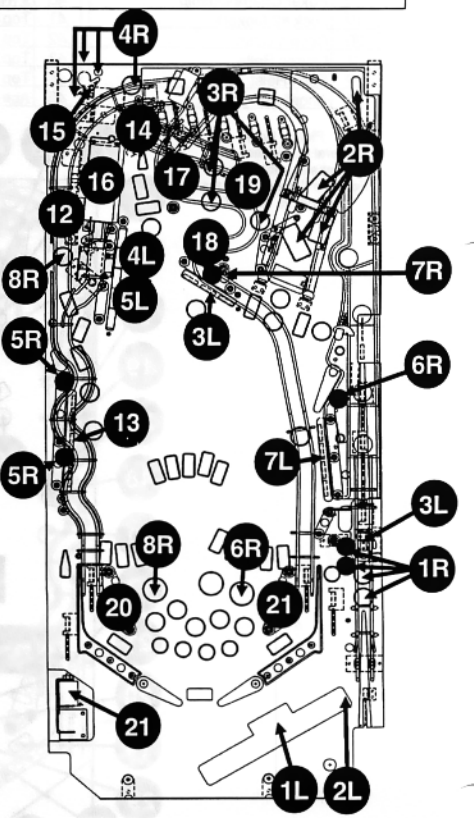

Switched, CPU Controlled Auxiliary & Constant Power Solenoids

Coil No.	Coil or Flashlamp Description	Drive Transistor (D.T.)	On Which Board?	D.T. Control Line	D.T. Control Line Connect	Power Line	Power Line Connnection	Power Description	Coil or Flash Type
1L	Coil: 4-Ball Assembly Lockout	Q46	CPU	VIO-BRN	PPB J2-1	BRN	PPB J6-1, 2	32v L	25-1240
1R	Flashlamp: X4 P/F, Insert X0 Skill Shot Flash			BLK-BRN	PPB J9-1	ORN	PPB J6-4, 5	32v R	Bulb #89
2L	Coil: Ball Release (Eject)	Q45	CPU	VIO-RED	PPB J2-2	BRN	PPB J6-1, 2	32v L	23-800
2R	Flashlamp: X4 P/F, Insert X0 Jokers Flash			BLK-RED	PPB J9-2	ORN	PPB J6-4, 5	32v R	Bulb #89
3L	Coil: Skill Shot Launch 50v	Q5	PPB	VIO-ORN	PPB J8-2	YEL/VIO	PPB J7-8	50v L	23-800
3R	Flashlamp: X3 P/F, Insert X1 Turbo Bumpers Flash	Q44	CPU	BLK-ORN	PPB J9-3	ORN	PPB J6-4, 5	32v R	Bulb #89
4L	Coil: 5-Bank Autodrop Down	Q43	CPU	VIO-YEL	PPB J2-4	BRN	PPB J6-1, 2	32v L	32-1800
4R	Flashlamp: X3 P/F, Insert X1 Paddle Wheel Flash			BLK-YEL	PPB J9-4	ORN	PPB J6-4, 5	32v R	Bulb #89
5L	Coil: 5-Bank Drop Target	Q4	PPB	VIO-GRN	PPB J8-4	YEL/VIO	PPB J7-8	50v L	23-700
5R	Flashlamp: X2 P/F, Insert X2 Lower Left Flash	Q42	CPU	BLK-GRN	PPB J9-5	ORN	PPB J6-4, 5	32v R	Bulb #89
6L	Coil: 3-Bank Drop Target	Q3	PPB	VIO-BLU	PPB J8-7	YEL/VIO	PPB J7-8	50v L	23-800
6R	Flashlamp: X2 P/F, Insert X2 Right Drop Target Flash	Q41	CPU	BLK-BLU	PPB J9-6	ORN	PPB J6-4, 5	32v R	Bulb #89
7L	Coil: 4-Bank Drop Target	Q40	CPU	VIO-BLK	PPB J2-8	BRN	PPB J6-1, 2	32v L	23-700
7R	Flashlamp: X1 P/F, Insert X3 3-Bank Drop Target Flash			BLK-VIO	PPB J9-7	ORN	PPB J6-4, 5	32v R	Bulb #89
8L	Coil: Knocker 32v (In Cabinet)	Q39	CPU	VIO-GRY	PPB J2-8	BRN	PPB J6-1, 2	32v L	23-800
8R	Flashlamp: X2 P/F, Insert X2 Lower Left 5-Bank D.T. Flash			BLK-GRY	PPB J9-8	ORN	PPB J6-4, 5	32v R	Bulb #89
09	Coil: Plastic Ramp Diverter	Q30	CPU	BRN-BLK	CPU CN 12-1	RED	PS CN 3-6,7	32v	32-1800
10	Coil: Located on PPB in Backbox Left & Right Relay	Q29	CPU	BLK-RED	CPU CN 12-5	RED	PS CN 6-7	32v	24v DC 10A DPDT
11	Coil: Located on Power Supply Bd. G.I. Relay	Q28	CPU	BRN-ORN	CPU CN 12-4	RED	PS CN 3-6,7	32v	24v DC 10A DPDT
12	Coil: Riverboat Post Ball Lock Assembly	Q27	CPU	BRN-YEL	CPU CN 12-5	RED	PS CN 3-6,7	32v	27-1500
13	Coil: 5-Bank Lower Left Drop Target	Q26	CPU	BRN-GRN	CPU CN 12-6	RED	PS CN 3-6,7	32v	23-700
14	Coil: Upper VUK 50v	Q25/Q3	PPB	BRN-BLU	PPB J8-7	VIO-YEL	PPB J7-3	50v	25-1240
15	Coil: Upper Left Wheel Ball Deflector	Q24	CPU	BRN-VIO	CPU CN 12-8	RED	PS CN 3-6,7	32v	27-1500
16	Coil: Paddle Wheel	Q23	CPU	BRN-GRY	CPU CN 12-9	RED	PS CN 3-6,7	32v	Relay
17	Coil: Left Turbo Bumper	Q11	CPU	BLU-BRN	CPU CN 19-7	RED	PS CN 3-6	32v	23-700
18	Coil: Center Turbo Bumper	Q9	CPU	BLU-RED	CPU CN 19-4	RED	PS CN 3-6	32v	23-700
19	Coil: Right Turbo Bumper	Q8	CPU	BLU-ORN	CPU CN 19-3	RED	PS CN 3-6	32v	23-700
20	Coil: Left Slingshot	Q10	CPU	BLU-YEL	CPU CN 19-6	RED	PS CN 3-6	32v	23-800
21	Coil: Right Slingshot	Q12	CPU	BLU-GRN	CPU CN 19-8	RED	PS CN 3-6	32v	23-800
22	Coil: Laser Kick 50v	Q13/Q1	PPB	BLU-BLK	CPU CN 19-9	VIO-YEL	PS CN 3-6	50v	23-800

Flipper Solenoids

SSFB No.	Flipper Coil	Cabinet Switch	Switch Drive	Switch Return	E.O.S.	GND	Flipper 50vDC Power	Flipper 8vAC Hold	Flipper Coil Output
SSFB 1	Lwr. Rt. Flipper 23-900 BLU/YEL ORN/VIO	BLU-VIO SSFB CN1-7	GRN-GRY CPU CN8-9 TO SSFB CN1-4	WHT-GRY CPU CN10-1 TO SSFB CN1-3	BRN-VIO RT. EOS SW. TO CN1-1	BLK CPU CN5 TO CN1-6	BLK-WHT PPB J7-1, -5 to SSFB CN2-8, -9	GRY-GRN-GRY P/S CN1-10, -11, to SSFB CN2-7, -8	50v | 8vAC Q2, Q3, | SR1 CN2-7, 8
SSFB 1	Lwr. Lt. Flipper 23-900 GRY/YEL ORN/GRY	BLU-GRY SSFB CN1-11	GRN-GRY CPU CN8-9 TO SSFB CN1-4	WHT-VIO CPU CN10-2 TO SSFB CN1-5	BRN-GRY LT. EOS SW. TO CN1-9	BLK CPU CN5 TO CN1-6	BLK-WHT PPB J7-1, -5 to SSFB CN2-8, -9	GRY-GRN-GRY P/S CN1-10, -11, to SSFB CN2-7, -8	50v | 8vAC Q10, Q9, | SR2 CN2-4, 5
SSFB 1	Upr. Rt. Flipper 23-900 BLU/YEL ORN/GRY	GRY-VIO SSFB CN1-12	GRN-GRY CPU CN8-9 TO SSFB CN1-4	WHT-GRY CPU CN10-2 TO SSFB CN1-10	Not Used	BLK CPU CN5 TO CN1-6	BLK-WHT PPB J7-1, -5 to SSFB CN2-8, -9	GRY-GRN-GRY P/S CN1-10, -11, to SSFB CN2-7, -8	50v | 8vAC Q15, Q15,| SR3 CN2-1, 2

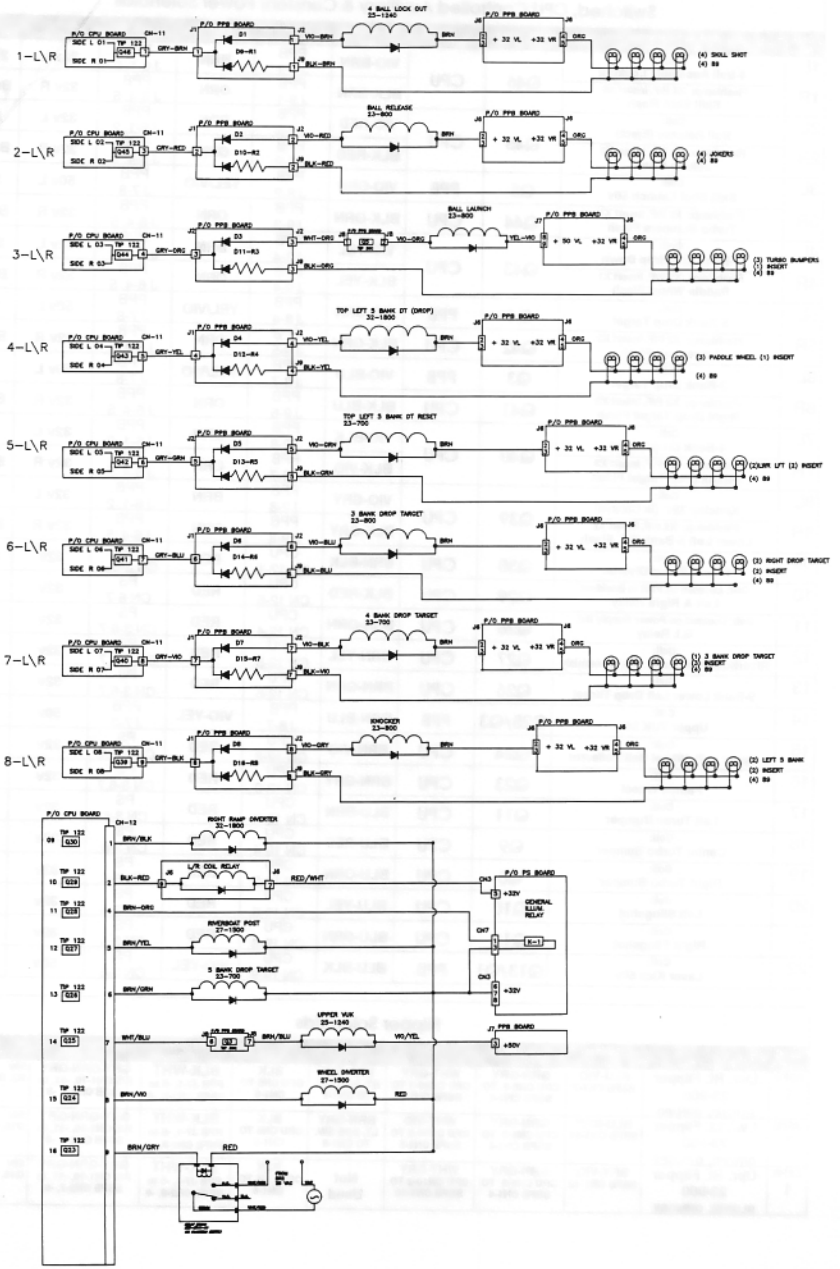
1-L\R
2-L\R
3-L\R
4-L\R
5-L\R
6-L\R
7-L\R
8-L\R
P/O CPU BOARD
P/O PPB BOARD
P/O PS BOARD
4 BALL LOCK OUT 23-1240
BALL RELEASE 23-800
BALL LAUNCH 23-800
TOP LEFT 3 BANK DT (DROP) 32-1800
TOP LEFT 3 BANK DT RESET 23-700
3 BANK DROP TARGET 23-800
4 BANK DROP TARGET 23-700
KNOCKER 23-800
RIGHT RAMP DIVERTER 32-1800
L/R COIL RELAY
RIVERBOAT POST 27-1800
5 BANK DROP TARGET 23-700
UPPER VUK 25-1240
WHEEL DIVERTER 27-1300
GENERAL ILLUM. RELAY
+32 VL
+32 VR
+50V
(4) SKILL SHOT
(4) 89
(4) JOKERS
(3) TURBO BUMPERS
(3) INSERT
(3) PADDLE WHEEL (1) INSERT
COLOR LFT (3) INSERT
(3) RIGHT DROP TARGET
(3) 3 BANK DROP TARGET
(3) LEFT 5 BANK

Technical Notes

PARTS IDENTIFICATION

Backbox Parts

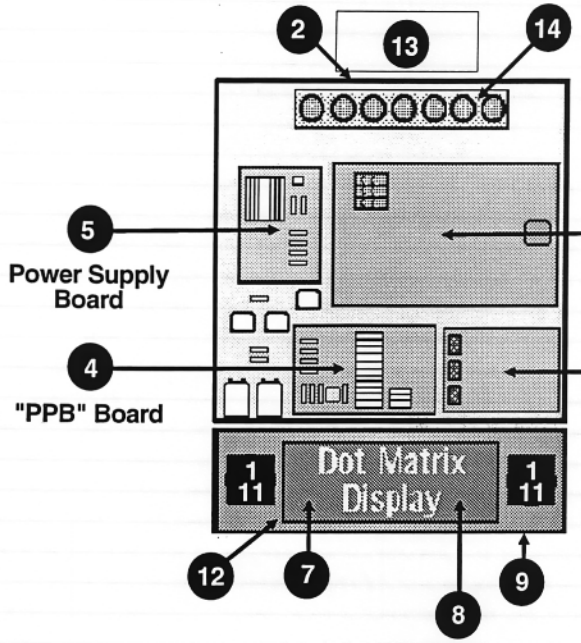

For Fuse descriptions & locations, see page 4.

(Display Controller Board Behind 7)

NOTE: An asterisk (*) (shaded items) indicates item is not noted in this illustration.

Item	Description	Part No.	Item	Description	Part No.
1	Speakers 4X4 Quam 89-9572 (X2)	031-5004-00	15 *	Static Shield *	535-6227-00
2	Back Box Lock	355-5008-00	16 *	Backglass Clear 26½" X 19¾" *	660-5018-00
3	CPU Bd. Non-Reflexive †	520-5003-04	17 *	26-7/16" Plastic Extrusion *	545-5018-08
4	PPB Board Ass'y Rev. C	520-5021-05	18 *	18¾" Plastic Extr. (Qty. 2) *	545-5018-09
5	Power Supply	520-5047-03	19 *	Glass Channel 26-7/16" *	545-5021-02
6	Sound Board 4MB 4MB †	520-5050-03	20 *	GNR Lights Insert *	525-5147-00
7	New Large Dot Matrix Display Board 192 X 64! ††	520-5075-00	21 *	Ribbon Cable, 14-Pin * Display to Display	602-5005-14
8	Display Controller Bd. †	520-5092-01	22 *	Ribbon Cable, 20-Pin * CPU to Sound Board	602-5005-20
9	Speaker Panel Assembly	500-5860-00			
10 *	Maverick Backglass Artwork *	830-5231-00	23 *	Ribbon Cable, 26-Pin * CPU to Display	602-5005-26
11	Maverick Speaker Grill ACE	830-5631-00			
	Mav. Speaker Grill BADGE	830-5631-01			
12	Mav. Speaker Plexi w\ Artwork	830-5630-00	†	When ordering PC Boards with ROMS, please specify the Game Name.	
13	Mav. Header Asm.	515-6108-00			
	Mav. Header Cards Butyrate	830-5466-18			
14	7 Vent Hole Grill 2½" X 18"	545-5072-02	††	Indicate Manufacturer.	

PARTS IDENTIFICATION

Cabinet Parts

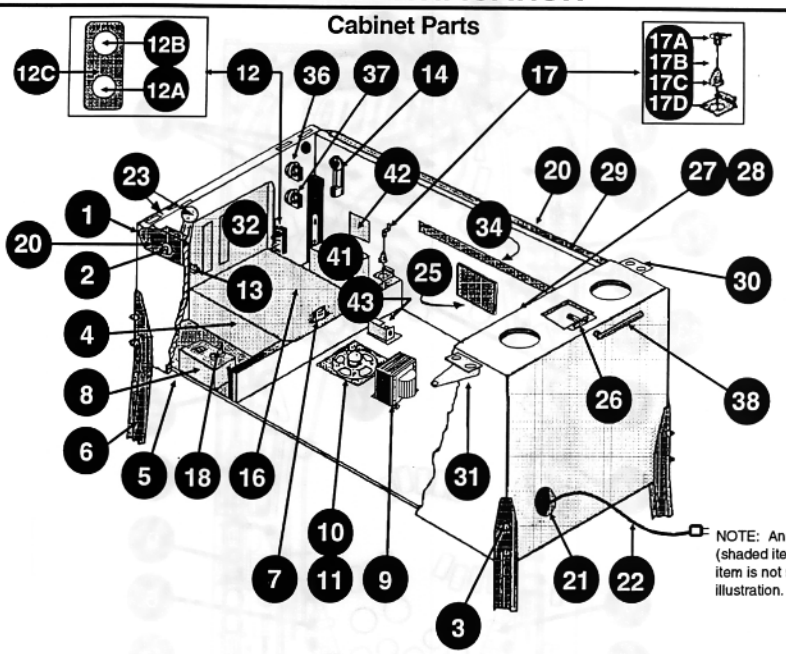

NOTE: An asterisk (*) (shaded items) indicates item is not noted in this illustration.

Item	Description	Part No.
1	Yellow Poker Chip Shooter Assembly	500-5856-06
2	Flipper Button Red Assy (Solid) (Qty. 2)	500-5026-32
3	Leg Bolt (BLK) 3/8-16 x 2-3/8 Hex Hd. (Qty. 8)	231-5000-01
4	Cash Box Plastic Bottom	545-5090-00
5	Power Sw. DPST Toggle (Under Cab.)	180-5001-00
6	Leg (Black) (Qty. 4)	535-5020-50
	Leg Leveler 3/8-16x3" (Qty. 4) *	500-5017-00
7	Cash Box Lock Bracket	535-5215-00
8	Service Outlet	180-5008-01
9	Transformer	010-5008-00
10	Speaker-Round - 8"	031-5005-00
11	Speaker Grill 7 X 7	535-6830-00
12	Dual Switch Ass'y (Includes 12A-12C)	500-5808-00
12A	Memory Protect Switch	180-5000-00
12B	Interlock Switch	180-5136-00
12C	Bracket	535-6958-00
13	Service Switch Set (Step Up / Down) Located on the Coin Door By Lock	
14	Flipper Switch, Left	180-5122-01
15 *	Flipper Switch, Right (Top/Bottom)	180-5048-00
16	Cash Box Cover (Validator)	535-5013-03
17	Plumb Bob Tilt Ass'y (Incl. 17A-17D)	500-5023-00
17A	Hanger Bracket (tilt)	535-5221-00
17B	Hanger Wire (tilt) (Attach to "17A")	535-5319-00
17C	Plumb Bob (tilt) (Attach to "17B")	535-5029-00
17D	Contact Bracket (tilt)	535-5220-00
18	Volume Control Single 10K Pot	123-5000-02

Item	Description	Part No.
19 *	Playfield Glass (T.P.) 21" x 43" *	660-5001-00
20	Side Armor - Left & Right	535-6831-00
21	Recessed Cup for Line Cord	545-5122-00
22	Line Cord 10' ROJ 3" Maximum	034-5000-10
23 *	Front Molding Lockdown Assy*	500-5020-01
24 *	Front Molding - Black *	500-5757-01
25	Solid State 3-Flipper Board (SSFB)	520-5076-00
26	#1 Roto Lock Male, (Femaile -02) *	355-5006-01
27	Rear Plastic Ext. P/F Glass 20-3/8"	545-5038-00
28	Mounting Fm. Rubber for Ext.	626-5001-00
29	Plastic Channel Left & Right	545-5017-00
30	Backbox Hinge Left	515-5987-00
31	Backbox Hinge Right	515-5987-01
32	Coin Door (w/Validator) USA	500-5018-17
33 *	Slide & Pivot Support Bracket Right*	535-5989-00
34 *	Slide & Pivot Support Bracket Left	535-5990-00
	Edge Slide Bracket *	535-5988-00
	Playfield Support Slide Rev. A *	535-6862-00
35 *	Playfield Support Bar * (Stay Arm)	535-5019-00
36	Start Button Switch Ass'y (Maverick)	500-5728-05
37	Extra Ball Switch Ass'y (Orange)	500-5779-07
38	5/16" Hex Key Allen Wrench	777-0001-00
39 *	Backbox/Cabinet Matrix/Fuse Info *	820-6104-03
40 *	3-Flipper Board Cover *	545-5165-02
41 *	Shaker Motor (Not Used This Game)	515-5893-00
42 *	Shaker Motor P.C. Board (Not Used)	520-5065-00
43	Knocker Assembly	500-5081-00

PLAYFIELD - MAJOR ASSEMBLIES †

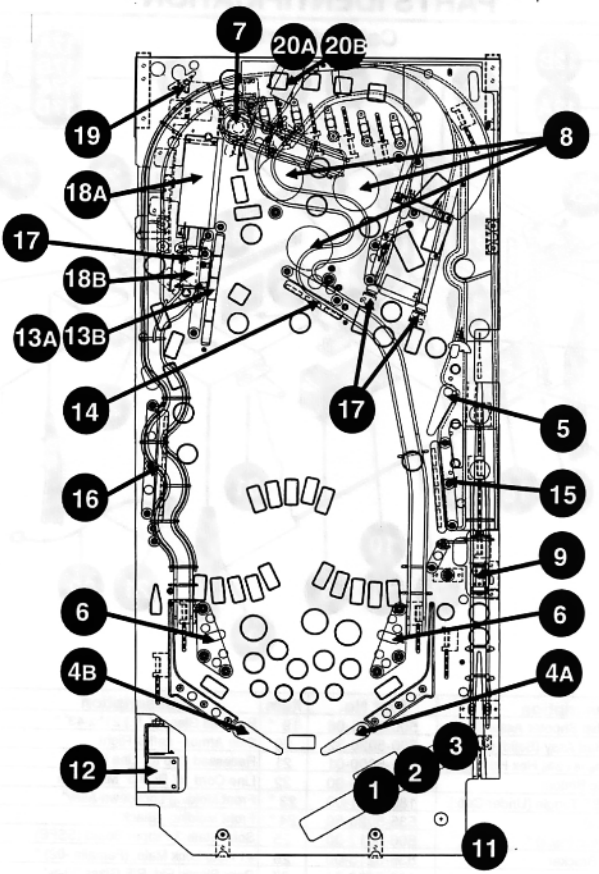

Item	Description	Part No.	Item	Description	Part No.
1	4-Ball Sw. Asm. (Under P/F)	500-5891-00	13A	Maverick 5-Bank Special D.T.	500-5912-00
2	Lock Ball Asm. (Under Arch)	500-5684-01	13B	Autodrop Asm. (Atch. to 13A)	515-6111-00
3	Deflector for 4-Ball Asm.	535-6606-01	14	3-Bank Drop Target Assembly	500-5621-03
4A	Flipper Asm., Lower Right	500-5693-01	15	4-Bank Drop Target Assembly	500-5621-04
4B	Flipper Asm., Lower Left	500-5693-02	16	5-Bank Drop Target Assembly	500-5799-05
5	Flipper Asm., Upper Right	500-5914-01	17	Stand-Up Narrow Trgt. (Qty. 2)	500-5857-08
6	Slingshot Assemblies (Qty. 2)	500-5226-00	18A	Paddle Wheel Assembly	500-5854-01
7	Vertical Up-Kicker Asm. (VUK)	500-5839-00	18B	Ball Lock Assembly	500-5867-01
8	Turbo Bumper Asm. (Qty. 3)	500-5227-02	19	Paddle Wheel / Left Orbit Ball Deflector Assembly	500-5886-00
9	Skill Shot Launch Assembly	500-5862-01			
10	Knocker Assembly (In Cabinet)	500-5081-00	20A	Plastic Ramp Diverter	515-6139-00
11	Poker Chip Shooter Asm.	500-5856-06	20B	Plastic Ramp Gate Asm. (Works with 20A)	515-6137-00
12	Laser Kick Back Assembly	500-5838-00			

† See Unique Parts for Major Assembly Breakdowns.

PLAYFIELD - RAMPS †

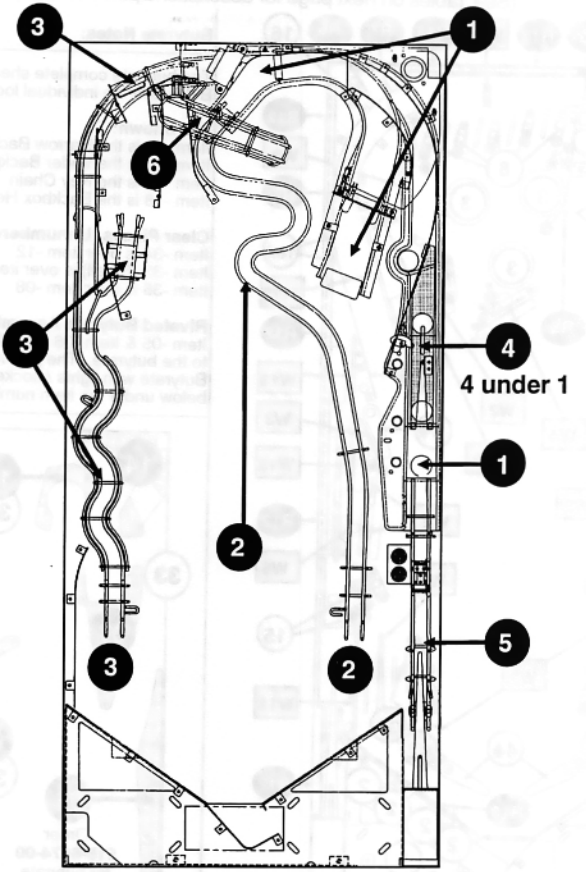

Item	Description	Part No.	Item	Description	Part No.
1 †	Right Plastic Ramp Assembly †	500-5883-01	5	Shooter Lane Wire Ramp Ass'y	500-5895-00
2	Right Return Wire Ramp	535-6253-00	5A	Shooter Lane Wire Ramp	515-6106-01
3 †	Left Return Wire Ramp Assy. †	500-5884-00	5B	Snap-In Minimars Red (Qty. 2)	550-5030-02
4	Skill Shot Flat Ramp Assy.	500-5885-00	5C	Clear Butyrate Around Lights	830-5466-32
4A	Skill Shot Flat Ramp	515-6145-00	5D	Mini-Foam Pad Hold Down	
4B	Microswitch	180-5126-00	5E	Clear Butyrate Small	830-5466-29
4C	Diode 1N4001	112-5001-00	5F	Screws (Qty. 2)	
4D	#2-56 5/8 HWHS Screws (Qty. 2)	237-5917-00	6	VUK Exit Wire Ramp	535-6299-01
† See Unique Parts for Ramp Assembly Breakdowns.					

PLAYFIELD - TOP PARTS (LOCATIONS)

(See Tables on next page for descriptions/part numbers)

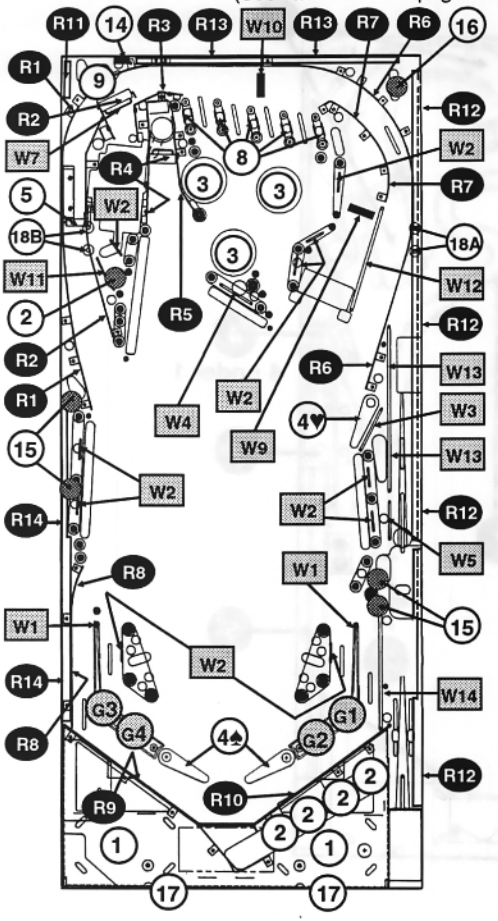

Ramps are not shown on drawing for clarity. See Playfield - Ramps (pg. 41) & Unique Parts (pgs. 64-67) for other Top Parts on the ramps.

(#)	General Parts
#	Painted Butyrate Pieces
(#)	Clear Butyrate Pieces
R#	All Rails (Flat, Wood, & Steel)
G#	All Ball Guides (Plastic & Metal)
W#	All Wire Forms (Metal)

Butyrate Notes:

The butyrate complete sheet PN is **830-5466-XX**. Below are the individual locations for the pieces.

Not Shown:
Item -15 is the Narrow Backpanel Butyrate
Item -16 is the Wider Backpanel Butyrate
Item -17 is the Key Chain
Item -18 is the Backbox Header

Clear Pieces (Unnumbered):
Item -34 is over item -12
Item -33 (Small) is over item -07
Item -35 is over item -08

Riveted Butyrate Assemblies:
Item -05 & Item -06 have 2 lights/sockets riveted to the butyrate. The part number to order if the Butyrate with lights / sockets is required are noted below under the item number.

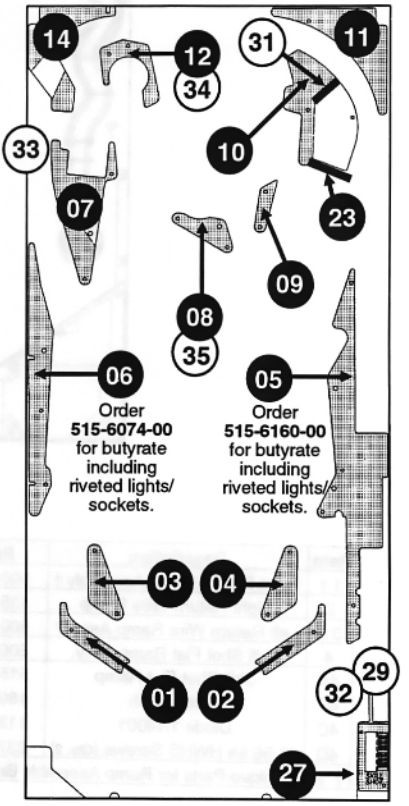

PLAYFIELD - TOP PARTS (TABLES)

(See diagrams on previous page for locations, except for items noted with an asterisk*)

Item	Description	Part No.
1	Bottom Arch Assembly (Metal)	500-5861-01
2	1-1/16" Steel Balls, 1-Captive, 4-Play (5 Total)	260-5000-00
3	Pop Bumper Cap (Clear) X3	550-5057-01
4♠	Flipper & Shaft Ass'y White ♠ X2	515-5133-01-01
4♥	Flipper & Shaft Ass'y White ♥ X1	515-5133-01-02
5 *	Left Orbit Switch Gate	See Flat Rails
6 *	1-Way Gate to Paddle Wheel	See Flat Rails
7 *	1-Way Gate to VUK	See Flat Rails
8	Lite Hood Top Lanes Yellow X5	550-5036-06
9	Spot Lite & Bracket Ass'y X1	500-5893-00
10 *	Lite Deflectors on Ramps X2	518-5026-11
11 *	Lite Cvr. Red Enter Ramp	545-5014-02
12 *	Lite Cvr. Yellow Skill Shots X3	545-5014-06
13 *	Lite Cvr. Flo. Org. Enter Ramp	545-5014-10
14	Mini-Mars Lite Cvr. Flo. Org.	550-5031-10
15	Mini-Mars Lite Cvr. Snap Red X4	550-5030-02

Item	Description	Part No.
16	Mini-Mars Light Cover Yellow	550-5031-06
17	Playfield Hanging Bracket X2	535-5216-03
18A	Pivot Pin Bracket Ass'y Right	500-5329-00
18B	Pivot Pin Bracket Ass'y Left	500-5329-01
	Both Incl. Pivot Brkt. Screws X4	237-5907-00
	and T-Nut X4	240-5101-00
19 *	Stay Arm Holder	535-5747-00
20 *	Plastic Riverboat	545-5539-02

Desc.: Butyrate	Part No.
P/F Butyrate Pieces † (1-34)	830-5466-XX

† To order replacement Butyrate, fill in the last 2 #'s with the corresponding # printed on each piece. For Clear Butyrate, describe location. Please view the location diagram for butyrate on the previous page.

See Playfield - Ramps (pg. 41) or Unique Parts (pgs. 66 & 67) for Clear Butyrate attached to ramps.

Item	Desc.: Mylar	Part No.
M1 *	Mylar Pieces (Clear Pre-Scored)	820-5841-00
M2 *	Mylar Pad (Clear :. 1" Sq.) X3	820-5815-00
M3 *	Front of Slingshot Clear Mylar	820-5821-00

Item	Desc.: Decals	Part No.
D1 *	Decal Sheet for Arch & Bumpers	820-6108-XX
D2 *	Decals for 3-Bank Drops	820-6110-01
D3 *	Decals for 4-Bank Drops	820-6110-02
D4 *	Decals for 5-Bank Upr. Drops	820-6110-03
D5 *	Decals for 5-Bank Lwr. Drops	820-6110-04

Item	Desc.: Rails (R)	Part No.
R1	Flat Rail Outer Left Orbit	535-6231-01
R2	Flat Rail Inner Lt. Orbit w/Gate & Paddle Wheel Gate Riveted	500-5904-00
R3	Flat Rail Behind VUK w/OPTO	515-6117-01
R4	Flat Rail to VUK Left with VUK Gate Riveted	515-6173-00
R5	Flat Rail to VUK Right	535-6250-01
R6	Flat Rail Outer Right Orbit	535-6232-01
R7	Flat Rail Inner Right Orbit	535-6230-01
R8	Flat Rail Left Outlane	535-6237-01
R9	Flat Rail Bottom Arch Left	535-6240-01
R10	Flat Rail Bottom Arch Right	535-6239-01
R11	Steel Rail Mini Upr. Left Corner	535-7097-00
R12	Steel Rail Playfield Right	535-6265-01
R13	Wood Rail 15" Top of Playfield	525-5007-12
R14	Wood Rail Bottom Left Playfield	525-5376-00

Item	Desc.: Ball Guides (G)	Part No.
G1	Ball Guide Upper Right Return	550-5043-01
G2	Ball Guide Lower Right Return	550-5037-01
G3	Ball Guide Upper Left Return	550-5038-01
G4	Ball Guide Lower Left Return	550-5064-01

Item	Desc.: Wire Forms (W)	Part No.
W1	Wire Form on Ball Guides X2	535-5642-00
W2	Wire Form 1" X10	535-5300-05
W3	Wire Form 2.5" (Upr. Flipper)	535-5300-01
W4	Wire Form 2" ø .120 (3-Bank)	535-5356-01
W5	Wire Form 2" ø .090 (4-Bank)	535-5300-10
W6	Wire Form on Left Orbit Gate	535-7078-00
W7	Wire Form on Paddle Wheel Gate	535-7087-01
W8	Wire Form on VUK Gate	535-7112-00
W9	Wire Form on Ramp Enter Gate	535-7163-00
W10	Wire Form on Ramp Exit Gate	535-6304-00
W11	Wire Form 2.75" Upr. 5-Bank	535-6492-02
W12	Wire Form 5.75" Inner Rt. Orbit	535-6492-12
W13	Wire Form 8.844" Shooter Lane	535-6546-01
W14	Wire Form 6.75" Right Outlane	535-6992-05
*	Snubbers Lwr. Flip. (Not Used)	535-5373-01

Page	Desc.: Other Part Numbers
44	Rubber Parts
45	Posts
46	Lamps with Sockets
47	Lamps with Sockets & Lamp Boards

See Table of Contents to find any other parts.

PLAYFIELD - RUBBER PARTS

A

Item **A** is located on the Knocker, Skill Launch, VUK, and Laser Kick Back.

B

Item **B** locations are not shown to maintain clarity in this diagram. An example of item **B** is located under item **E** at left outlane.

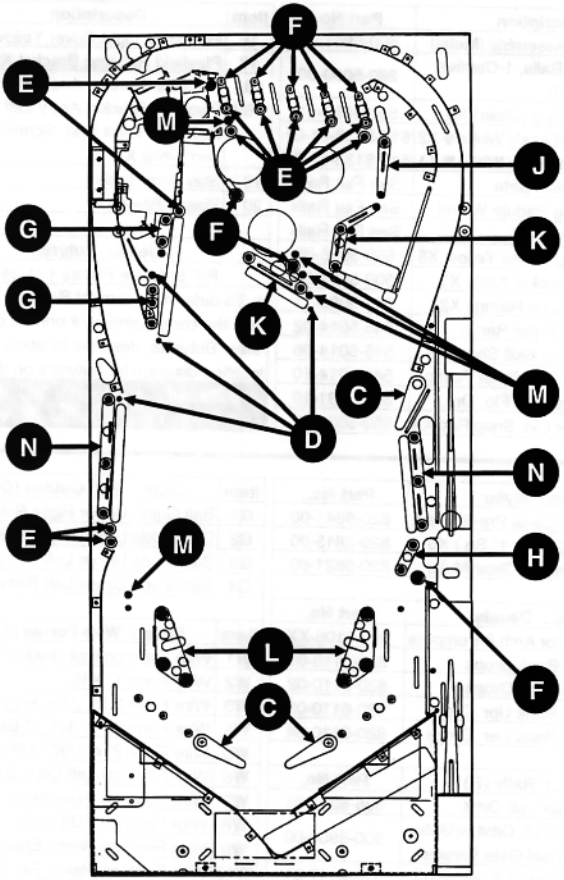

Item	Description	Qty.	Part No.	Item	Description	Qty.	Part No.
A	Rubber Bumper	4	545-5105-00	†	1-1/4" I.D. Black Rubber Ring	0	545-5348-06
B	Post Rubber (Sleeve Short)	24	545-5151-00	J	1-1/2" I.D. Black Rubber Ring	1	545-5348-07
†	Flipper Bushing (Small)	0	545-5192-00	K	2" I.D. Black Rubber Ring	2	545-5348-08
C	Flipper Rubber Rings	3	545-5277-00	L	2-1/2" I.D. Black Rubber Ring	2	545-5348-09
D	Post Rubber (Sleeve Tall)	4	545-5308-00	M	3/8" O.D. Black Rubber Ring	5	545-5348-19
E	3/16" I.D. Black Rubber Ring	11	545-5348-01	†	Bumper Post Rubber	0	545-5009-00
F	5/16" I.D. Black Rubber Ring	8	545-5348-02	N	2-3/4" I.D. Black Rubber Ring	2	545-5348-20
G	3/4" I.D. Black Rubber Ring	2	545-5348-04	†	1-3/4" I.D. Black Rubber Ring	0	545-5348-21
H	1" I.D. Black Rubber Ring	1	545-5348-05	† Items with a zero qty. are not used in this game.			

Please note, the size and/or quantities may change as production continues.

PLAYFIELD - POSTS

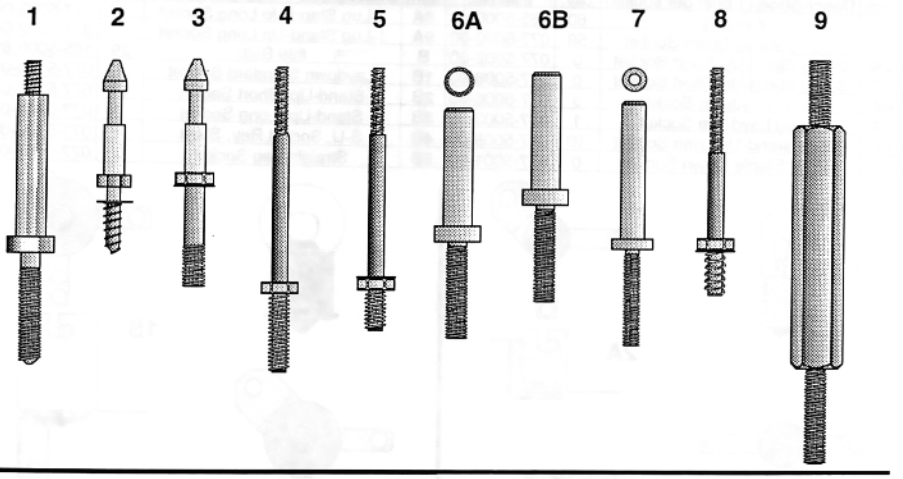

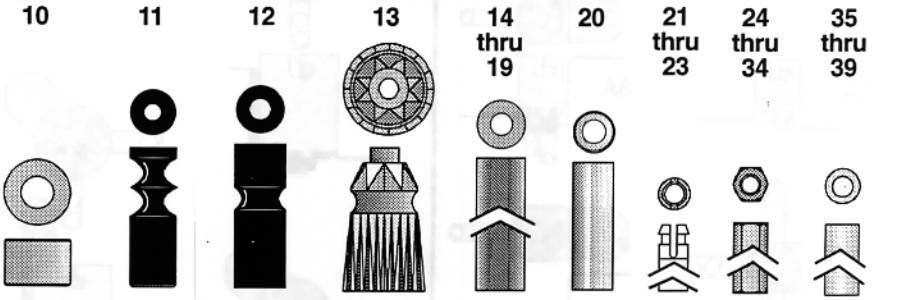

Item	Description	Qty.	Part No.	Item	Description	Qty.	Part No.
1	BUMPER POST - MACHINE	0	530-5007-00	20	Spcr. 1" Lg Metal 5/16" X .144ID	0	254-5001-00
2	MINI-POST-WOOD THD	4	530-5004-00	21	Spcr. ⅜ Plstc. Slf. Rtn. SRS6-6-01	26	254-5007-01
3	MINI-POST-MACHINE THD	4	530-5005-00	22	Spcr. ¼" Plstc. Slf. Rtn. SRS6-4-01	4	254-5007-02
4	MACH. POST SCREW LG.	7	530-5008-00	23	Spcr. ¾" Plstc. Slf.Rtn.SRS6-12-01	0	254-5007-03
5	POST MACHINE SCREW	18	530-5012-02	24	Spacer ¼" Hex Tapped 6-32	0	254-5008-00
6A*	BUMPER POST 8-32 TAP.	0	530-5075-00	25	Spacer ½" Hex Tapped 6-32	1	254-5008-03
6B	BUMPER POST UNTAPPED	5	530-5057-01	26	Spacer ⅝" Hex Tapped 6-32	3	254-5008-02
7	BUMPER POST 6-32 TAP.	0	530-5127-00	27	Spacer ¾" Hex Tapped 6-32	3	254-5008-04
8	POST MACHINE SCREW	0	530-5263-01	28	Spacer 1" Hex Tapped 6-32	2	254-5008-06
9	MINI-PLAYFIELD SUPPORT	0	530-5285-00	29	Spacer 2" Hex Tapped 6-32	6	254-5008-07
10	SPACER BACKBOX HINGE	2	530-5099-00	30	Spacer 2⅝" Hex Tapped 6-32	1	254-5008-08
11	STAND-OFF 2 GRV. 1-1/16"	0	530-5102-01	31	Spacer 1½" Hex Tap. 6-32	1	254-5008-09
12	PLASTIC POST (GRY)	28	550-5059-00	32	Spacer 1¼" Hex Tap. 6-32	0	254-5008-11
13	SML. JEWEL POST (CLEAR)	3	550-5034-01	33	Spacer 2¾" Hex Tap. 6-32	0	254-5008-12
	SML. JEWEL POST (GRN)	9	550-5034-04	34	Spacer 17/8" Hex Tap. 6-32	1	254-5008-20
14	SPCR. ½" PLSTC. (BLK) ⅜"	2	254-5000-01	35	Spcr. ½" Lg.X5/16"X.144ID	3	254-5014-00
15	SPCR. ½" PLSTC. Nar. ⅜"	1	254-5000-03	36	Spcr. ¾" Lg.X5/16"X.144ID	0	254-5014-01
16	SPCR. 1" PLSTC. ⅜"	2	254-5000-04	37	Spcr. 1.13" Lg.X5/16"X.144ID	6	254-5014-02
17	SPCR. 1¼" PLSTC. ⅜"	0	254-5000-05	38	Spcr. ¼" Lg.X5/16"X.144ID	4	254-5014-03
18	SPCR. 1⅛" PLSTC. ⅜"	1	254-5000-06	39	Spcr. 9/16" Lg.X5/16"X.144ID	3	254-5014-04
19	SPCR. ¾" PLSTC. ⅜"	3	254-5000-07	† Items with a zero Qty. are not used in this game.			

Please note, the size and/or quantities may change as production continues.

PLAYFIELD - LAMPS WITH SOCKETS

Item	Description (1 bulb per socket)	Qty.	Part No.	Item	Description (1bulb per socket)	Qty.	Part No.
A	#44 Bulb	80	165-5000-44	8A	2-Lug Stand-Up Long Socket	2	077-5005-00
1A	2-Lug Staple Down Socket	56	077-5000-00	9A	1-Lug Stand-Up Long Socket	3	077-5012-00
2A	2-Lug Stand-Up Short Socket	0	077-5002-00	B	#89 Bulb	29	165-5000-89
3A	3-Lug Stand-Up Short Socket	0	077-5008-00	1B	Laydown Standard Socket	1	077-5100-00
4A	3-Lug Laydown Socket	9	077-5006-00	2B	Stand-Up, Short Socket	17	077-5101-00
5A	2-Lug Laydown Socket	1	077-5003-00	3B	Stand-Up, Long Socket	7	077-5102-00
6A	3-Lug Stand-Up Long Socket	10	077-5009-00	4B	S-U, Socket Rev. Short	4	077-5103-00
7A	3-Lug Staple Down Socket	0	077-5001-00	5B	Straight Leg Socket	0	077-5107-00

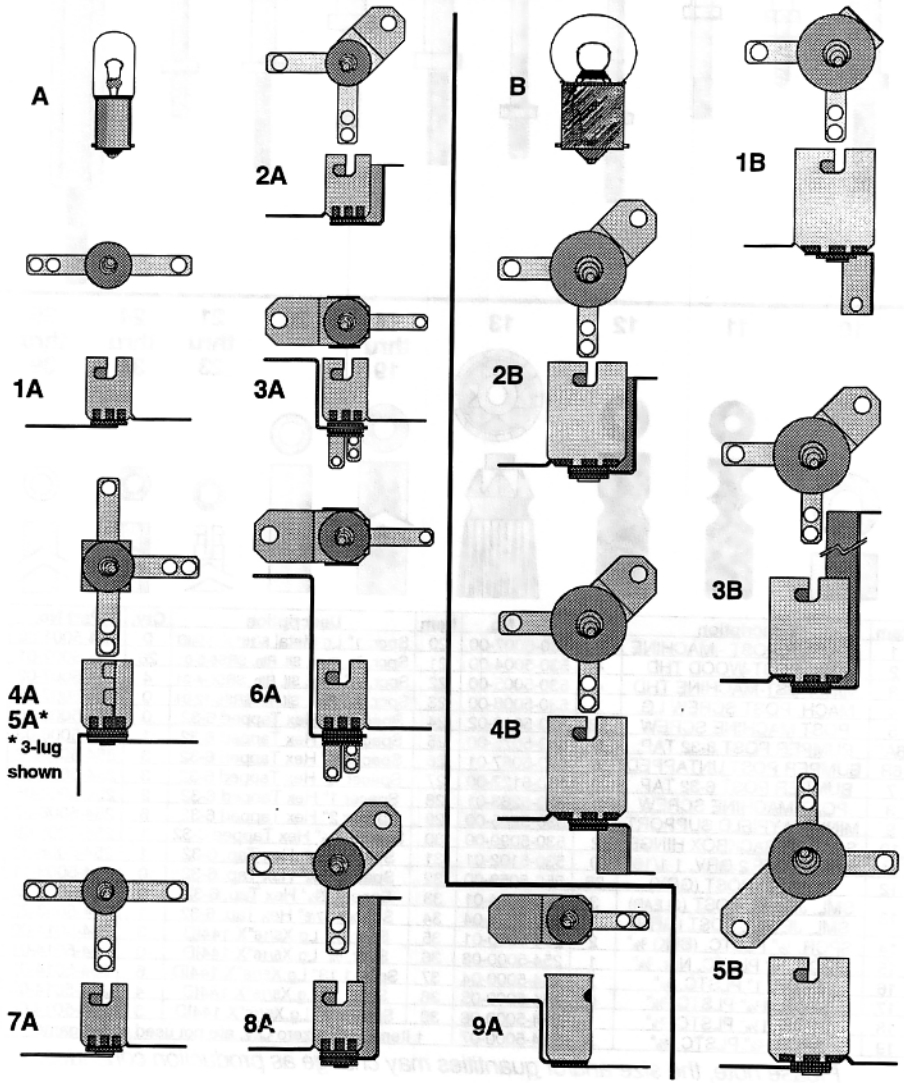

PLAYFIELD - LAMPS WITH SOCKETS

Item	Description (1 bulb per socket)	Qty.	Part No.
D	#555 Wedge Base Bulb *	48	165-5002-00
1D	555 Wedge Base Socket **	34	077-5007-00
2D	Laydown Wedge Base L/R BLK	4	077-5026-01
3D	Wedge Offset Bracket Socket	5	077-5029-00
4D	Laydown Wedge Base Black	0	077-5026-00
E	#906 Wedge Base Bulb	5	165-5004-00
1E	906 Wedge Base Socket	0	077-5016-00

* - 3 extra #555 Bulb located 1 per Pop Bumper.

Item	Lamp Board P.N.	Item	Lamp Board P.N.
A	520-5093-01	E	520-5079-05
B	520-5093-02	F	520-5079-06
C	520-5093-03	G	520-5079-07
D	520-5093-04		

D

** This socket used only on Lamp Bds.

1D

Note the notch in the bracket. (Used with Reflectors.)

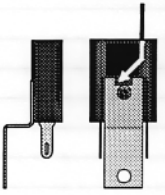

2D

3D

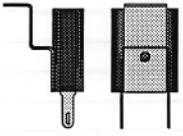

4D

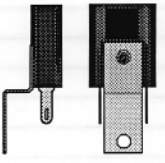

E

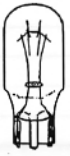

1E

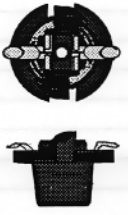

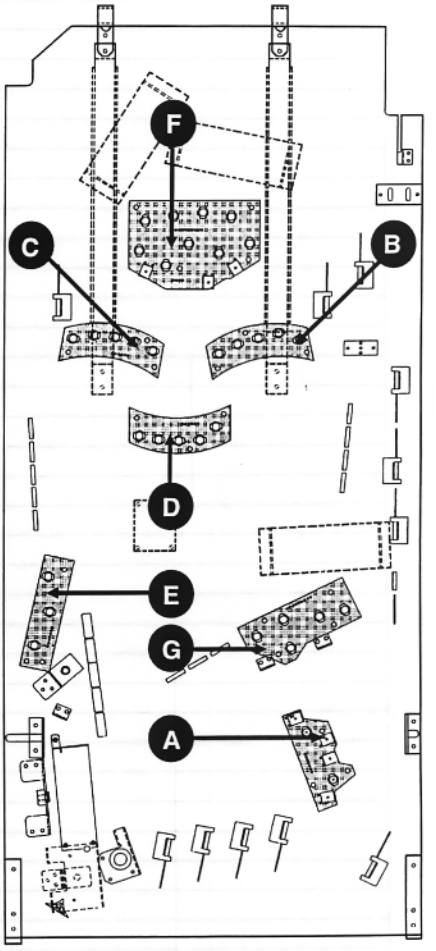

UNDER PLAYFIELD: BOTTOM VIEW

Part Order Notes

UNIQUE PARTS

Lock Ball Asm.
500-5684-01

4-Ball Trough Assembly
500-5891-00

Deflector
535-6606-01
Shown Smaller

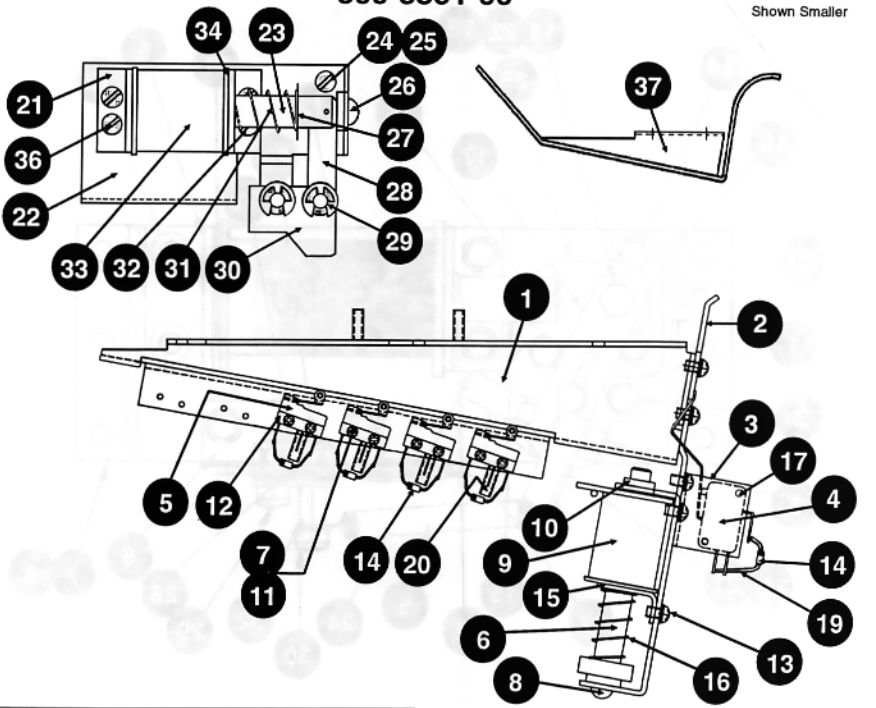

Item	Description	Part No.
1	Outhole Mounting Bracket	535-6621-01
2	Coil Mounting Bracket	535-6622-01
3	Switch Mounting Bracket	535-6623-00
4	Switch, Miniature	180-5118-00
5	Switch, Subminiature (Qty. 4)	180-5119-00
6	Plunger Assembly	515-5000-02
7	#2-56 PPH X .5 LG (Qty. 8)	237-5806-00
8	Rubber Bumper	545-5105-00
9	Coil, 23-800, incl. Coil Sleeve	090-5001-01
10	Coil Sleeve	545-5076-00
11	#2 Split LW (Qty. 8)	244-5001-00
12	Switch Protector (Qty. 4)	535-6539-00
13	#8-32 PPHW/SEM X .25 LG (Qty. 8)	232-5300-00
14	IN4001 Diode (Qty. 5)	112-5001-00
15	Coil Retaining Bracket	535-5203-01
16	Spring	266-5020-00
17	#4-40 PPH X .62 LG (Qty. 2)	237-5832-00
18	Cable Asm. (Not Shown)	036-5301-04
19	Insulating Tubing .08 FT.	605-5003-00
20	Insulating Tubing .17 FT.	605-5006-00

Item	Description	Part No.
21	Core Stop Assembly	515-5088-00
22	Lock Ball Bracket Assembly	515-5817-01
23	Plunger ø7/16 X 2-¼ LG	530-5250-01
24	Spacer	545-5400-00
25	#8-32 PPH X 1" LG	232-1104-16
26	Rubber Bumper	545-5105-00
27	E-Ring ø.44 Shaft	270-5005-00
28	Link, Lock Ball	535-6649-00
29	E-Ring, .25 Shaft (Qty. 2)	250-0008-00
30	Lock Ball Cam Assembly	515-5815-01
31	Spring	266-5000-00
32	Coil Retaining Bracket	535-6658-00
33	Coil, 25-1240, incl. Coil Sleeve	090-5034-00
34	Coil Sleeve	545-5411-00
35	Wire Harness (Not Shown)	036-5301-01
36	#6-32 HWH TC X .38 LG (Qty. 4)	237-5898-00
37	Ball Deflector (Trough Entry Scoop)	535-6606-01

Flipper Assembly, Lower
500-5693-01 (Right), 500-5693-02 (Left)

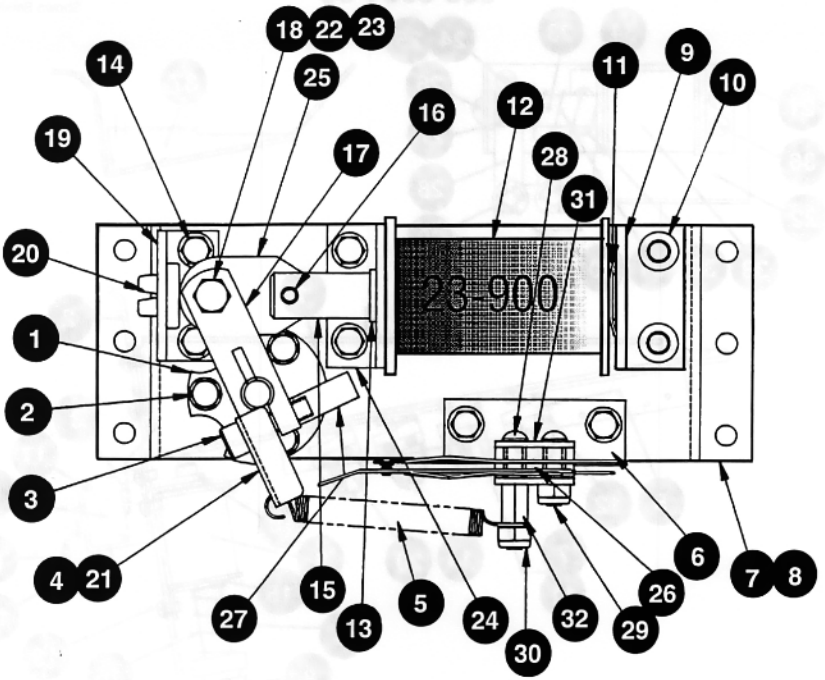

Item	Description	Part No.	Item	Description	Part No.
1	Flipper Bushing	545-5070-00	17	Pawl	530-5070-00
2	#6-32 X .38 LG HWH (Qty. 3)	237-5910-00	18	#10-32 X .75 LG Shoulder Bolt	231-5019-00
3	#10-32 SOC HD X .75 LG	237-5864-00	19	Plunger Stop Bracket	535-5279-01
4	Spring Bracket (Left)	535-6663-02	20	Nylon Stop	545-5445-00
5	Flipper Return Spring	265-5029-02	21	Spring Bracket (Right)	535-6663-01
6	Switch Mounting Bracket	535-6664-00	22	Bushing	530-5139-00
7	Flipper Base (Left)	515-5077-02	23	#10-32 Elastic Stop Nut	240-5203-00
8	Flipper Base (Right)	515-5077-01	24	Front Bracket	535-6453-00
9	Coil Stop Bracket	515-5346-00	25	Flipper Link	545-5401-00
10	¼-20 SOC HD X .38 LG (Qty. 2)	237-5861-00	26	Power Switch	180-5124-01
11	Spring Washer	269-5002-00	27	Plastic Cap	545-5084-00
12	Coil 23-900, incl. Coil Sleeve	090-5020-30	28	#6-32 X 1" LG PPH	237-5506-00
13	Coil Sleeve	545-5388-00	29	#6-32 X .63 LG PPH	237-5899-00
14	#8-32 X .38 LG HWH (Qty. 6)	237-5903-00	30	#6-32 Elastic Stop Nut	240-5005-00
15	Plunger and Link Assembly	515-5822-00	31	Switch Plate	535-5045-00
16	Roll Pin	251-5000-00	32	¼ Hex Spacer (⅜" Long)	254-5008-12

Flipper Assembly, Upper
500-5914-01 (Right)

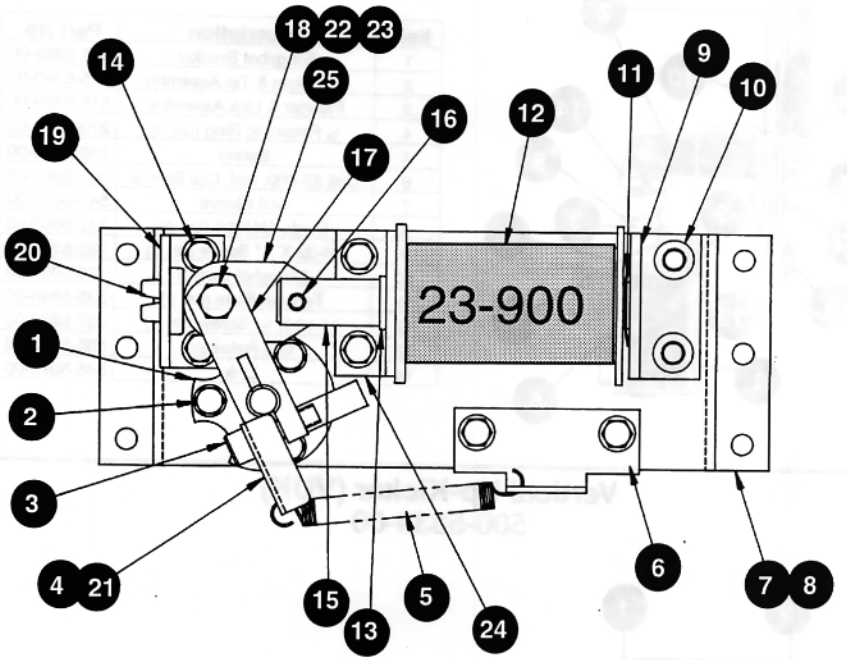

Item	Description	Part No.	Item	Description	Part No.
1	Flipper Bushing	545-5070-00			
2	#6-32 X .38 LG HWH (Qty. 3)	234-5000-00	14	#8-32 X .38 LG HWH (Qty. 6)	234-5100-00
3	#10-32 SOC HD X .75 LG	237-5864-00	15	Plunger and Link Assembly	515-5822-00
4	Spring Bracket (Left)	535-6663-02	16	Roll Pin	251-5000-00
5	Flipper Return Spring	265-5029-02	17	Pawl	530-5070-00
6	Switch Mounting Bracket	535-6664-00	18	#10-32 X .75 LG Shoulder Bolt	231-5019-00
7	Flipper Base (Left)	515-5077-02	19	Plunger Stop Bracket	535-5279-01
8	Flipper Base (Right)	515-5077-01	20	Nylon Stop	545-5445-00
9	Coil Stop Bracket	515-5346-00	21	Spring Bracket (Right)	535-6663-01
10	¼-20 SOC HD X .38 LG (Qty. 2)	237-5861-00	22	Bushing	530-5139-00
11	Spring Washer	269-5002-00	23	#10-32 Elastic Stop Nut	240-5206-00
12	Coil 23-900, incl. Coil Sleeve	090-5050-30	24	Front Bracket	535-6453-00
13	Coil Sleeve	545-5388-00	25	Flipper Link	545-5401-00

Lower Slingshot Assemblies
500-5226-00

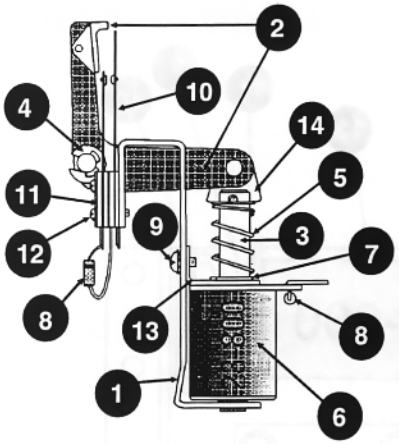

Item	Description	Part No.
1	Slingshot Bracket	515-5339-00
2	S. S. Arm & Tip Assembly	515-5340-00
3	Plunger & Link Assembly	515-5338-00
4	¼ Retaining Ring (Qty. 2)	270-5002-00
5	Spring	266-5020-00
6	Coil 23-800, incl. Coil Sleeve	090-5001-02
7	Coil Sleeve	545-5031-00
8	Diode 1N4004 (Qty. 2)	112-5003-00
9	#8-32 X ¼" Screw (Qty. 2)	232-5300-00
10	Slingshot Switch	180-5054-00
11	Tension Plate (Qty. 2)	535-5846-00
12	#4-40 X ½" Screw (Qty. 4)	237-5837-00
13	Coil Retainer	535-5203-03
14	Link	545-5062-00

Vertical Up-Kicker (VUK)
500-5839-00

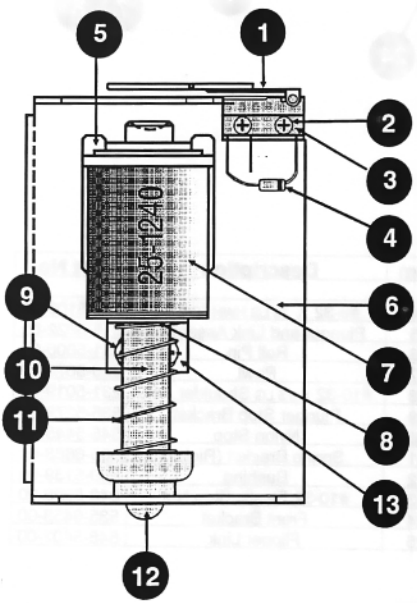

Item	Description	Part No.
1	Switch	180-5116-00
2	Screw (Qty. 2)	237-5806-00
	Washer (Qty. 2)	244-5001-00
3	Protector	535-6539-00
4	Diode 1N4001	112-5001-00
5	Insulation	545-5431-00
6	Bracket	535-6607-01
7	Coil 25-1240, incl. Coil Sleeve	090-5034-01
8	Coil Sleeve	545-5076-00
9	Screw (Qty. 2)	232-5300-00
10	Plunger	515-5941-01
11	Spring	266-5020-00
12	Bumper Pad	545-5105-00
13	Bracket	535-5203-01

Turbo Bumper Assembly
500-5227-02†

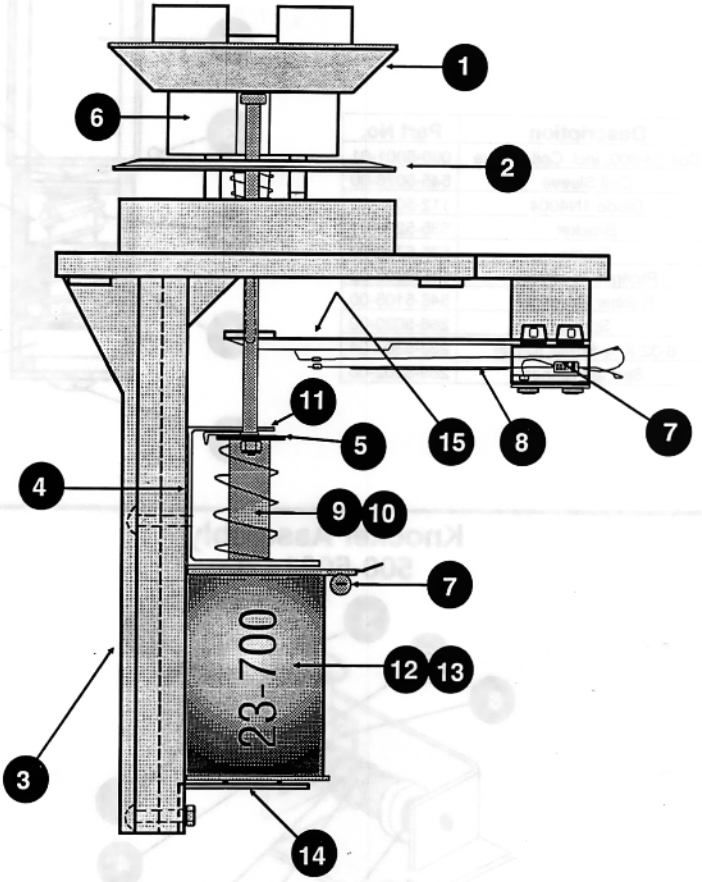

Item	Description	Part No.	Item	Description	Part No.
1	Rod & Ring Assembly	515-5085-00	9	Plunger	530-5062-00
2	Bumper Skirt	545-5098-00	10	Spring	266-5009-00
3	Bumper Housing	545-5100-00	11	Metal Yoke	535-5877-00
4	Plunger Bracket	535-5277-00	12	Coil 23-700, incl. Coil Sleeve	090-5022-02
5	Fiber Yoke	545-5120-00	13	Coil Sleeve	545-5031-00
6	Bumper Body	545-5197-00	14	Coil Stop Assembly	515-5088-00
7	Diode 1N4004 (Qty. 2)	112-5003-00	15	Spoon Switch	545-5542-00
8	Switch	180-5015-01	†	Bumper Cover (Clear) (Qty. 3)	550-5057-01

† Bumper Cover (not shown) is not included with above assembly, it must be ordered separately.

Skill Launch Assembly
500-5862-01

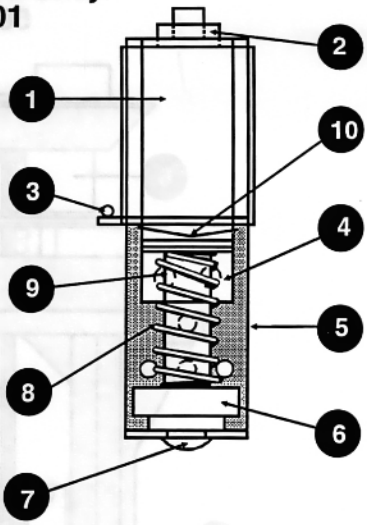

Item	Description	Part No.
1	Coil 23-800, incl. Coil Sleeve	090-5001-01
2	Coil Sleeve	545-5076-00
3	Diode 1N4004	112-5003-00
4	Bracket	535-5203-01
5	Frame	535-6730-00
6	Plunger Assembly	515-5000-02
7	Rubber Grommet	545-5105-00
8	Spring	266-5020-00
9	8-32 X ¼ SEMS (Qty. 2)	232-5300-04
10	Spring Washer	269-5002-00

Knocker Assembly
500-5081-00

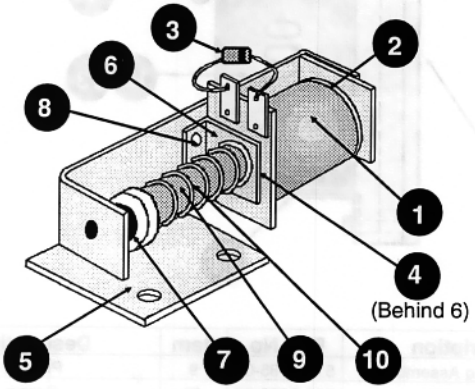

Item	Description	Part No.	Item	Description	Part No.
1	Coil 23-800, incl. Coil Sleeve	090-5001-01	6	Coil Retainer Bracket	535-5203-03
2	Coil Sleeve	545-5076-00	7	Bumper Pad	545-5105-00
3	Diode 1N4004	112-5003-00	8	#8-32 X ¼ • PH PAN SEMS (Qty. 2)	232-5300-00
4	Crescent Spring Washer	269-5002-00	9	Plunger Assembly	515-5000-02
5	Kickback/Knocker Bracket	535-5265-00	10	Spring	266-5020-00

Poker Chip Shooter Assembly
500-5856-06 (Yellow)

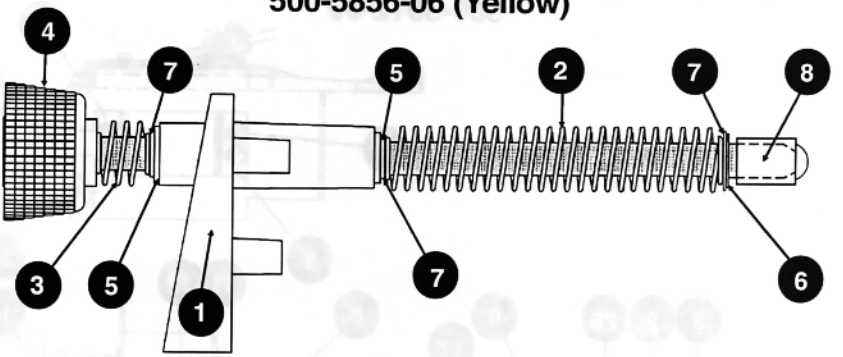

Item	Description	Part No.	Item	Description	Part No.
1	Housing	535-5067-00	5	Bushing - Oilite (Qty. 2)	280-5010-00
2	Spring Large Green	266-5001-04	6	Retaining Ring	270-5012-00
3	Spring Small (Colorless)	266-5010-00	7	Washer (Qty. 3)	242-5014-00
4	Poker Chip Rod Assembly	515-6113-06	8	Plunger Tip	545-5276-00

Laser Kick Back Assembly
500-5838-00

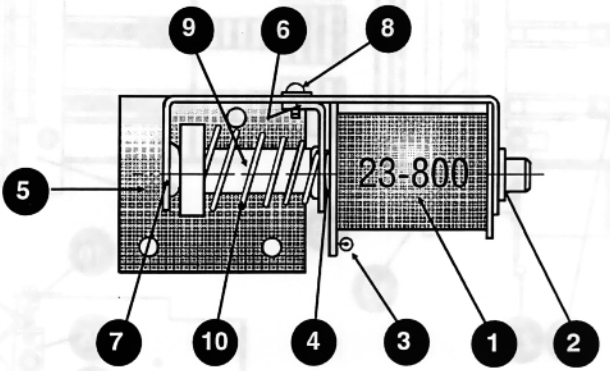

Item	Description	Part No.	Item	Description	Part No.
1	Coil 23-800, incl. Coil Sleeve	090-5001-01	6	Coil Retainer Bracket	535-5203-03
2	Coil Sleeve	545-5076-00	7	Bumper Pad	545-5105-00
3	Diode 1N4004	112-5003-00	8	#8-32 X ¼" PH PAN SEMS (Qty. 2)	232-5300-00
4	Crescent Spring Washer	269-5002-00	9	Plunger Assembly	515-5000-02
5	Kickback/Knocker Bracket	535-5265-00	10	Spring	266-5020-00

Maverick 5-Bank Special D.T. Assembly
500-5912-00

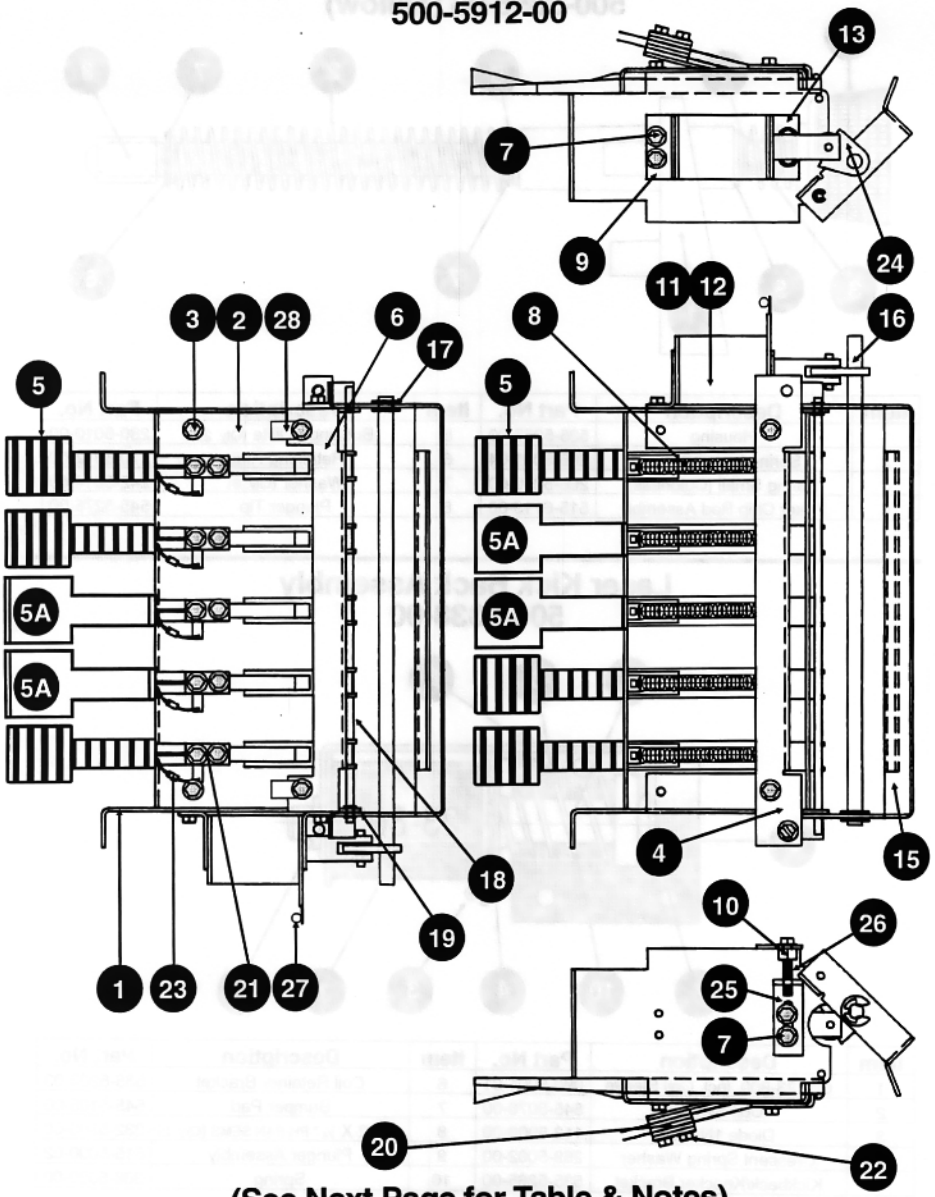

(See Next Page for Table & Notes)

Maverick 5-Bank Special D.T. Assembly
500-5912-00

Item	Description	Part No.	Item	Description	Part No.
1	Target End Plate (Qty. 2)	535-6162-00	14	Plunger/Link Assembly	515-5338-00
2	Target Frame	535-6159-05	15	Target Lift Bracket	535-6509-05
3	8-32 X 3/8 (Qty. 6)	237-5879-00	16	Target Shaft	530-5179-05
4	Spring Mount. Plate	535-6940-00	17	E-Ring (¼")	270-5002-00
5	Thin Target (Specify Game)	545-5048-01	18	Pivot Shaft	530-5180-05
5A	Thick Target (Specify Game)	545-5533-01	19	E-Ring (⅛")	270-5000-00
6	Trgt. Retaining Brkt.	535-5042-05	20	Switch Assembly	180-5104-00
7	6-32 X 3/8 SHWHTCS Type 23 (Qty. 6)	237-5891-00	21	Switch Plate	535-5045-00
8	Target Reset Spring	265-5003-00	22	6-32 X ½	237-5878-00
9	Coil Support Bracket	535-6154-00	23	Diode 1N4001 on Switch	112-5001-00
10	8-32 Nyloc	240-5102-00	24	Plunger Link	545-5293-00
11	23-700 Coil for 5-Bank *	090-5022-02	25	Adjustment Bracket	535-6508-00
12	Coil Sleeve	545-5031-00	26	8-32 X 7/8 (1)	237-5890-00
13	Plunger Stop Bracket	515-5008-00	27	Diode 1N4004 on Coil	112-5003-00
* Coil Sleeve included with above Coil Part Numbers.			28	Cable Clamp (Qty. 2)	040-5000-23

Autodrop Assembly
515-6111-00

(Attached to front of the Maverick 5-Bank Special D.T. Ass'y.)

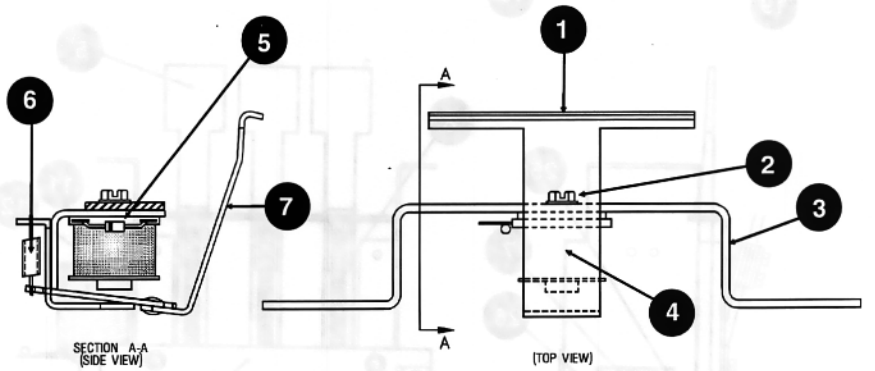

Item	Description	Part No.	Item	Description	Part No.
1	Comb & Coil Assembly	515-6110-00	5	Diode 1N4004	112-5003-00
2	#8-32 X 3/8 HWH Screw	237-5903-00	6	Mini-Spring 15oz	265-5022-02
3	Mounting Bracket	535-6291-00	7	Comb Assembly	515-6109-00
4	Lock-Up Coil 32-1800	090-5031-00			

Drop Target 3-Bank & 4-Bank Assemblies
500-5621-03 (Center) & 500-5621-04 (Right)

(3-Bank Assy. Shown)

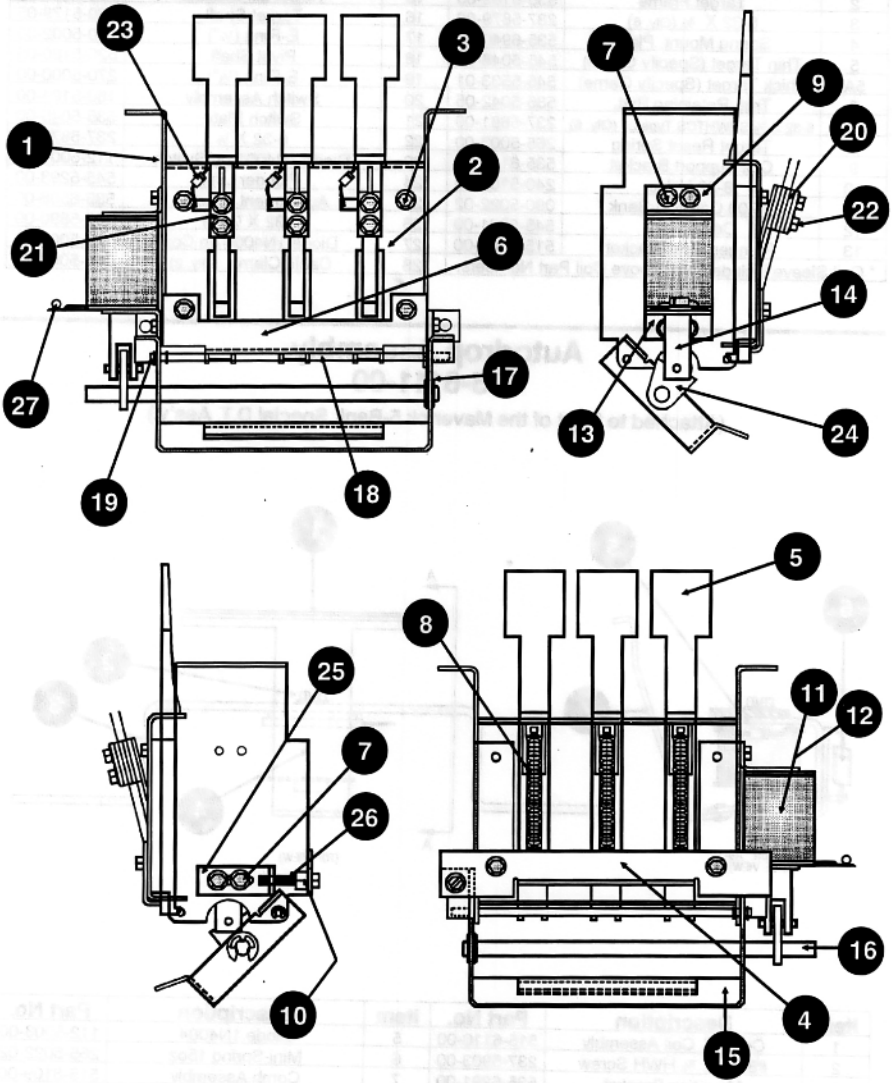

(See Next Page for Table & Notes)

Drop Target 3-Bank & 4-Bank Assemblies
500-5621-03 (Center) & 500-5621-04 (Right) †

Item	Description	Part No.	Item	Description	Part No.
1	Target End Plate (Qty. 2)	535-6162-00	13	Plunger Stop Bracket	515-5008-00
2	Target Frame for 5-Bank	535-6159-05	14	Plunger/Link Assembly	515-5338-00
2	Target Frame for 4-Bank	535-6159-04	15	Target Lift Bracket for 5-Bank	535-6509-05
2	Target Frame for 3-Bank	535-6159-03	15	Target Lift Bracket for 4-Bank	535-6509-04
3	8-32 X 3/8 (Qty. 6)	237-5879-00	15	Target Lift Bracket for 3-Bank	535-6509-03
4	Spring Mount. Plate for 5-Bank	535-6510-05	16	Target Shaft for 5-Bank	530-5179-05
4	Spring Mount. Plate for 4-Bank	535-6510-04	16	Target Shaft for 4-Bank	530-5179-04
4	Spring Mount. Plate for 3-Bank	535-6510-03	16	Target Shaft for 3-Bank	530-5179-03
5	Target (Specify Game)	545-5048-01	17	E-Ring (1/4")	270-5002-00
6	Trgt. Retaining Brkt. for 5-Bank	535-5042-05	18	Pivot Shaft for 5-Bank	530-5180-05
6	Trgt. Retaining Brkt. for 4-Bank	535-5042-04	18	Pivot Shaft for 4-Bank	530-5180-04
6	Trgt. Retaining Brkt. for 3-Bank	535-5042-03	18	Pivot Shaft for 3-Bank	530-5180-03
7	6-32 X 3/8 SHWHTCS Type 23 (Qty. 6)	237-5891-00	19	E-Ring (1/8")	270-5000-00
8	Target Reset Spring	265-5003-00	20	Switch Assembly	180-5104-00
9	Coil Support Bracket	535-6154-00	21	Switch Plate	535-5045-00
10	8-32 Nyloc	240-5102-00	22	6-32 X 1/2	237-5878-00
11	23-700 Coil for 5-Bank *	090-5022-02	23	Diode 1N4001 on Switch	112-5001-00
11	23-700 Coil for 4-Bank *	090-5022-02	24	Plunger Link	545-5293-00
11	23-800 Coil for 2 & 3-Bank *	090-5001-02	25	Adjustment Bracket	535-6508-00
12	Coil Sleeve	545-5031-00	26	8-32 X 7/8 (1)	237-5890-00
* Coil Sleeve included with above Coil Part Numbers.			27	Diode 1N4004 on Coil	112-5003-00

† - Note: Table above shows common parts and unique parts for the 3, 4 & 5 Bank Drop Target Assemblies. The shaded areas (X-Bank D.T.) are not used in this game. Quantity is designated by bank size (see Dwg.) (e.g. 1 diode per target, thus if a 4-Bank is ordered, diode qty. is 4.)
When ordering any part always reference game name for proper decals.

Stand-Up Target Assembly (Narrow Rectangular)
500-5857-08 (White)

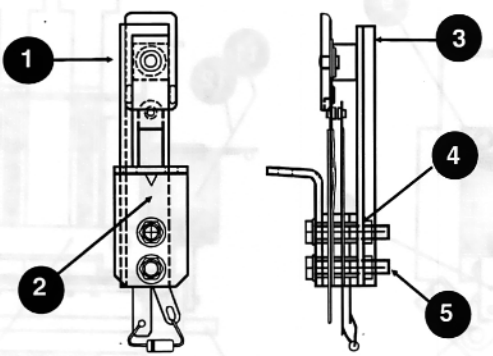

Target Color 500-5835-XX	
Clear	-01
Red	-02
Amber	-03
Green	-04
Blue	-05
Yellow	-06
Orange	-07
White	-08
Purple	-09

Item	Description	Part No.	Item	Description	Part No.
1	Switch & Target Ass'y	515-5967-08	3*	Back Plate *Optional	535-6452-00
2	Mounting Bracket	535-6896-00	4	6-32 Nyloc (Qty. 2)	240-5010-00
3	Back Plate	535-5116-00	5	6-32 X 3/4 HWH MS (Qty. 2)	237-5893-00

Drop Target 5-Bank Assembly
500-5799-05 (Left)

(3-Bank Assy. Shown)

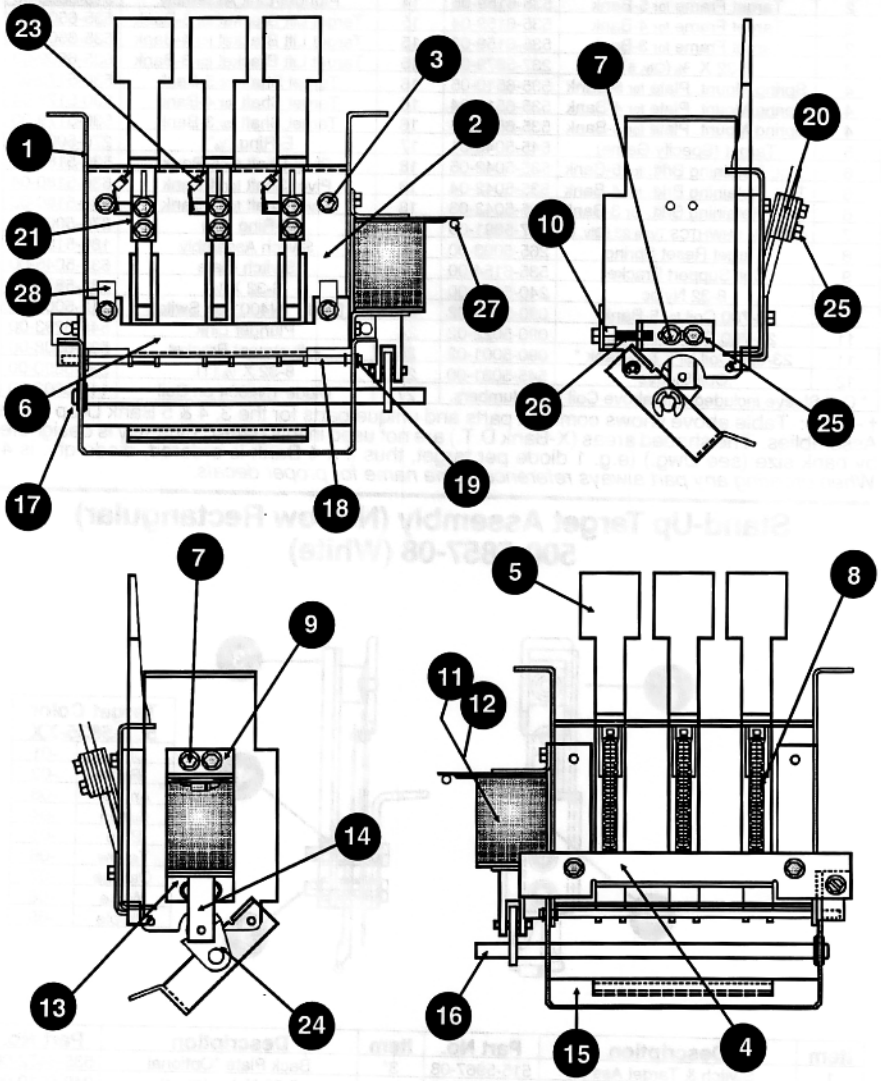

(See Next Page for Table & Notes)

Drop Target 5-Bank Assembly
500-5799-05 (Left) †

Item	Description	Part No.	Item	Description	Part No.
1	Target End Plate (Qty. 2)	535-6162-00	13	Plunger Stop Bracket	515-5008-00
2	Target Frame for 5-Bank	535-6159-05	14	Plunger/Link Assembly	515-5338-00
2	Target Frame for 4-Bank	535-6159-04	15	Target Lift Bracket for 5-Bank	535-6509-05
2	Target Frame for 3-Bank	535-6159-03	15	Target Lift Bracket for 4-Bank	535-6509-04
3	8-32 X 3/8 (Qty. 6)	237-5879-00	15	Target Lift Bracket for 3-Bank	535-6509-03
4	Spring Mount, Plate for 5-Bank	535-6510-05	16	Target Shaft for 5-Bank	530-5179-05
4	Spring Mount, Plate for 4-Bank	535-6510-04	16	Target Shaft for 4-Bank	530-5179-04
4	Spring Mount, Plate for 3-Bank	535-6510-03	16	Target Shaft for 3-Bank	530-5179-03
5	Target (Specify Game)	545-5048-01	17	E-Ring (1/4")	270-5002-00
6	Trgt. Retaining Brkt. for 5-Bank	535-5042-05	18	Pivot Shaft for 5-Bank	530-5180-05
6	Trgt. Retaining Brkt. for 4-Bank	535-5042-04	18	Pivot Shaft for 4-Bank	530-5180-04
6	Trgt. Retaining Brkt. for 3-Bank	535-5042-03	18	Pivot Shaft for 3-Bank	530-5180-03
7	6-32 X 3/8 SHWHTCS Type 23 (Qty. 6)	237-5891-00	19	E-Ring (1/8")	270-5000-00
8	Target Reset Spring	265-5003-00	20	Switch Assembly	180-5104-00
9	Coil Support Bracket	535-6154-00	21	Switch Plate	535-5045-00
10	8-32 Nyloc	240-5102-00	22	6-32 X 1/2	237-5878-00
11	23-700 Coil for 5-Bank *	090-5022-02	23	Diode 1N4001 on Switch	112-5001-00
11	23-700 Coil for 4-Bank *	090-5022-02	24	Plunger Link	545-5293-00
11	23-800 Coil for 2 & 3-Bank *	090-5001-02	25	Adjustment Bracket	535-6508-00
12	Coil Sleeve	545-5031-00	26	8-32 X 7/8 (1)	237-5890-00
			27	Diode 1N4004 on Coil	112-5003-00
* Coil Sleeve included with above Coil Part Numbers.			28	Cable Clamp (Qty. 2)	040-5000-23

† - Note: Table above shows common parts and unique parts for the 3, 4 & 5 Bank Drop Target Assemblies. The shaded areas (X-Bank D.T.) are not used in this game. Quantity is designated by bank size (see Dwg.) (e.g. 1 diode per target, thus if a 5-Bank is ordered, diode qty. is 5.) *When ordering any part always reference game name for proper decals.*

Drop Target Interchangeability Summary

Individual parts on the Left, Center, and Right Drop Targets (pages 58, 60 & 62) in this game are interchangeable. The differences are:

☞ For the ***3-Bank Drop Targets***, the coil used is a **23-800**, Part Nº 090-5001-02. For the ***4- & 5-Bank Drop Targets***, the coil used is a **23-700**, Part Nº 090-5022-00. All other parts are identical.

☞ On the ***Maverick 5-Bank Special D.T.*** (500-5912-00), the **Targets** (Item 5A), Part Nº 545-5533-01 is *unique* to that assembly. Also, the **Spring Mounting Plate** (Item 4), Part Nº 535-6940-00, is only used on this assembly. The **Autodrop Assembly**, Part Nº 515-6111-00, is only attached to the *Maverick 5-Bank Special Drop Target.* Cable Clamps are attached only to the 5-banks.

☞ With the other two types of Drop Targets, (3-, 4- & 5-Bank *Normal Targets*) Part Nºs 500-5621-XX and 500-5799-XX, the **ONLY** difference is the **COIL POSITION** (*note again the coil size for a 3-Bank vs. 4-/5-Bank Drop Targets*).

Paddle Wheel Assembly
500-5854-01

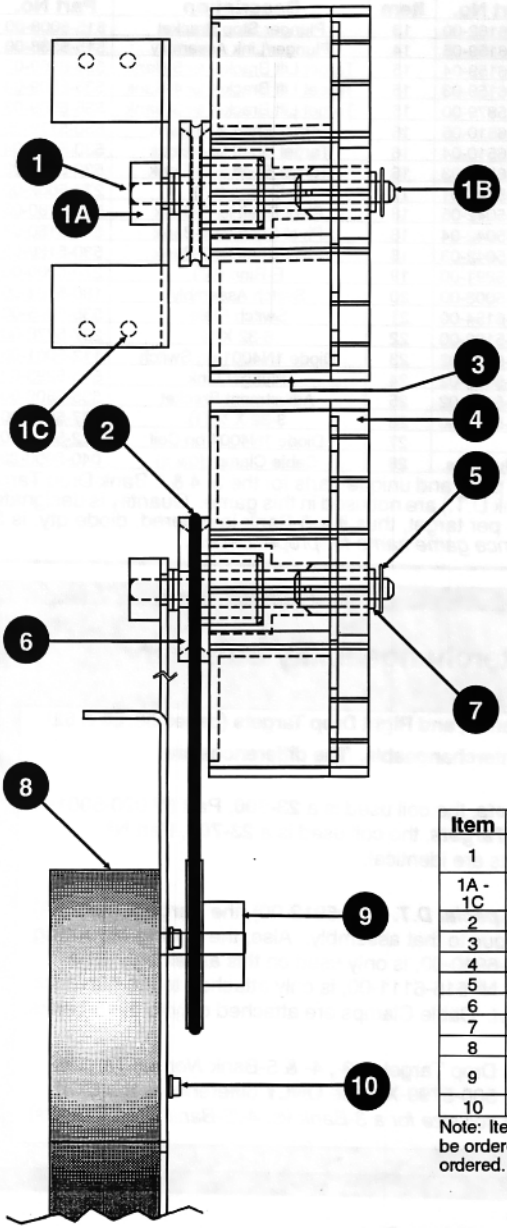

Note:
Not Shown and not apart of this assembly is the **Metal Ball-Lift Wheel Shield,** *Part Nº* ***535-6296-01****. It is mounted and located under the playfield directly below the paddle wheel.*

Item	Description	Part No.
1	Paddle Wheel Sub-Assembly (*includes items 1A-1C below*)	515-6094-01
1A - 1C	Paddle Wheel Hub, Shaft, and Mounting Bracket	See Note
2	Rubber O-Ring Drive	545-5513-00
3	Ball Lift Wheel Housing	545-5534-01
4	Pad. Whl. Ball-Lift Cover (Qty. 2)	545-5535-01
5	E-Ring for ¼" Dia. Shaft	270-5002-00
6	Paddle Wheel Pulley	545-5516-00
7	Washers (Qty. 6)	242-5008-00
8	Paddle Wheel Motor	041-5036-00
9	Output Pulley (with Insert +Set Screw)	515-6614-00
10	8-32 X ⅜" HWH SERR TF (Qty. 4)	237-5903-00

Note: Item names are given for reference only and cannot be ordered. For these items, the sub-assembly must be ordered.

Ball Lock Assembly
500-5867-01

Item	Description	Part No.
1	Plunger Sub-Assembly (Includes items 1A-1B)	515-6119-01
1A - 1B	Metal Ball Lock Plunger, Nylon Plunger	See Note
2	Mounting Bracket Sub-Ass'y (Includes items 2A-2C)	515-6118-00
2A - 2C	Mounting Bracket, Shading Ring, Core Stop	See Note
3	Coil Bracket (Qty. 2)	535-5203-01
4	Nyliner, 7/16 Shaft	545-5418-00
5	E-Ring, 7/16 Shaft	270-5005-00
6	Spring	266-5020-00
7	#8-32 X ¼ PPHW/SEMS (Qty. 4)	232-5300-00
8	Coil 27-1500, incl. Coil Sleeve	090-5004-00
9	Coil Sleeve	545-5411-00
10	Diode 1N4004	112-5003-00

Note: Item names are given for reference only and cannot be ordered. For these items, the sub-assembly must be ordered.

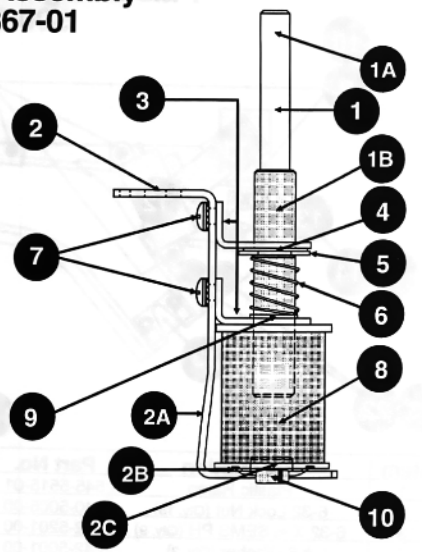

Paddle Wheel / Left Orbit Ball Deflector
500-5886-01

Item	Description	Part No.
1	Ball Deflector	545-5552-00
2	#4-40X 1-½ P PH Screw (Qty. 2)	237-5934-00
3	Compression Spring (Qty. 2)	266-5045-00
4	Top Plate Sub-Assembly (Includes items 4A-4B)	515-6149-01
4A - 4B	Top Plate, Support Shaft	See Note
5	Coil Support Bracket	535-7073-00
6	Fiber Yoke	545-5120-00
7	#6-32 Stop Nut (Qty. 2)	240-5005-00
8	Spring	266-5009-00
9	Metal Yoke	535-5877-01
10	Plunger	530-5062-00
11	#8-32 X ¼ PPHW SEMS (Qty. 3)	232-5300-00
12	Coil 27-1500, incl. Coil Sleeve	090-5004-00
13	Coil Sleeve	545-5411-00
14	Diode 1N4004	112-5003-00
15	Mounting Bracket Sub-Ass'y (Includes items 13A-13B)	515-6150-00
15A - 15C	Shading Ring, Mounting Bracket, Core Stop	See Note
16	#4-40 Nyloc	240-5303-00
17	Deflector Bearing Plate	535-7158-00
18	ø.312 Nyliner PN #5L1-FF (Qty. 2)	545-5485-00

Note: Item names are given for reference only and cannot be ordered. For these items, the sub-assembly must be ordered.

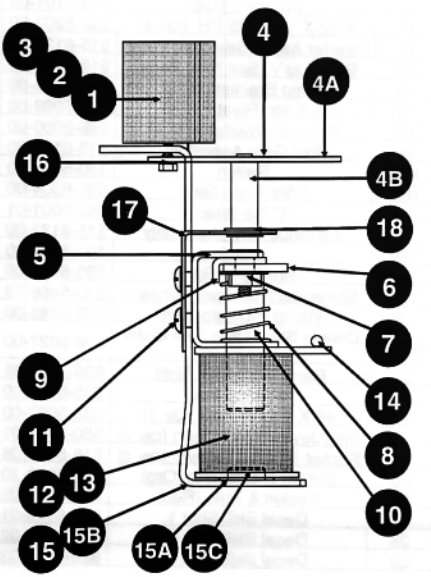

Plastic Right Ramp Assembly
500-5883-01

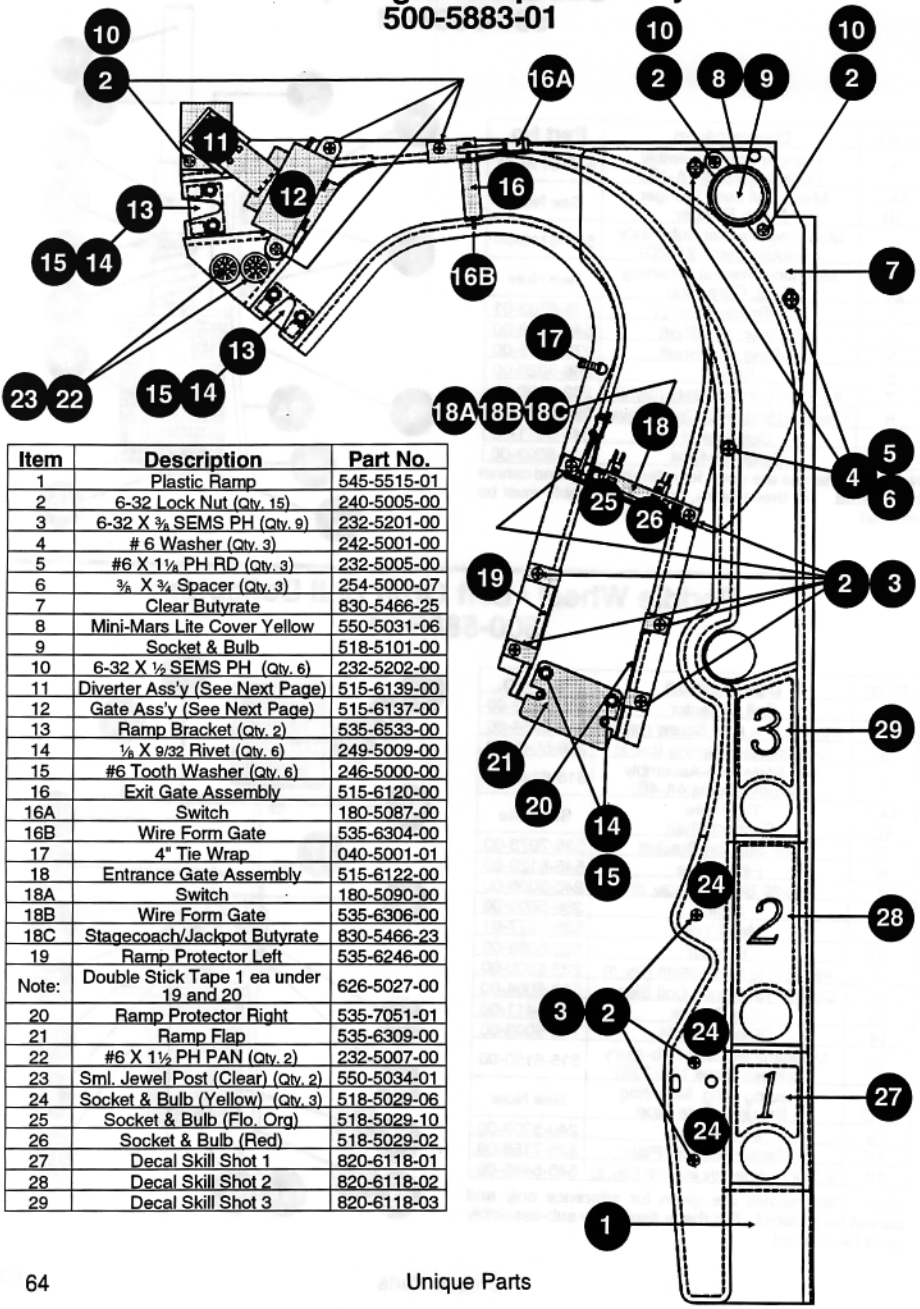

Item	Description	Part No.
1	Plastic Ramp	545-5515-01
2	6-32 Lock Nut (Qty. 15)	240-5005-00
3	6-32 X 3/8 SEMS PH (Qty. 9)	232-5201-00
4	# 6 Washer (Qty. 3)	242-5001-00
5	#6 X 1 1/8 PH RD (Qty. 3)	232-5005-00
6	3/8 X 3/4 Spacer (Qty. 3)	254-5000-07
7	Clear Butyrate	830-5466-25
8	Mini-Mars Lite Cover Yellow	550-5031-06
9	Socket & Bulb	518-5101-00
10	6-32 X 1/2 SEMS PH (Qty. 6)	232-5202-00
11	Diverter Ass'y (See Next Page)	515-6139-00
12	Gate Ass'y (See Next Page)	515-6137-00
13	Ramp Bracket (Qty. 2)	535-6533-00
14	1/8 X 9/32 Rivet (Qty. 6)	249-5009-00
15	#6 Tooth Washer (Qty. 6)	246-5000-00
16	Exit Gate Assembly	515-6120-00
16A	Switch	180-5087-00
16B	Wire Form Gate	535-6304-00
17	4" Tie Wrap	040-5001-01
18	Entrance Gate Assembly	515-6122-00
18A	Switch	180-5090-00
18B	Wire Form Gate	535-6306-00
18C	Stagecoach/Jackpot Butyrate	830-5466-23
19	Ramp Protector Left	535-6246-00
Note:	Double Stick Tape 1 ea under 19 and 20	626-5027-00
20	Ramp Protector Right	535-7051-01
21	Ramp Flap	535-6309-00
22	#6 X 1 1/2 PH PAN (Qty. 2)	232-5007-00
23	Sml. Jewel Post (Clear) (Qty. 2)	550-5034-01
24	Socket & Bulb (Yellow) (Qty. 3)	518-5029-06
25	Socket & Bulb (Flo. Org)	518-5029-10
26	Socket & Bulb (Red)	518-5029-02
27	Decal Skill Shot 1	820-6118-01
28	Decal Skill Shot 2	820-6118-02
29	Decal Skill Shot 3	820-6118-03

11 Plastic Ramp Diverter Assembly
515-6139-00

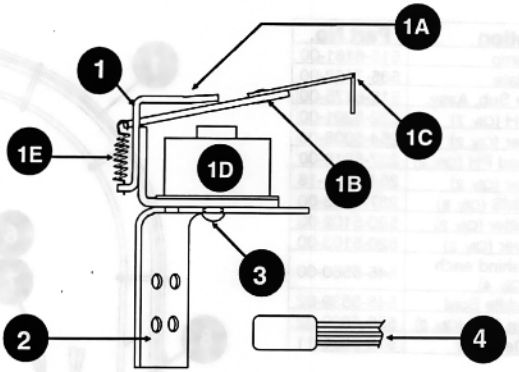

Item	Description	Part No.
1	Gate Lift Coil & Plate (Includes 1A-1E)	515-6203-02
1A - 1C	Frame, Armature, and Armature Extension	See Note
1D	Lock-Up Coil, 32-1800 (does not have a Coil Sleeve) Diode 1N4004 (Not Shown)	090-5031-00 112-5003-00
1E	Spring	265-5024-00

Item	Description	Part No.
2	Diverter Support Bracket	535-7055-00
3	8-32 PHMS SEMS (Loctite @ Ass'y)	232-5301-00
4	Wiring Harness	036-5363-08

Note: Item names are given for reference only and cannot be ordered. For these items, the sub-assembly must be ordered.

12 Plastic Ramp Gate Assembly
(works with above Diverter Ass'y)
515-6137-00

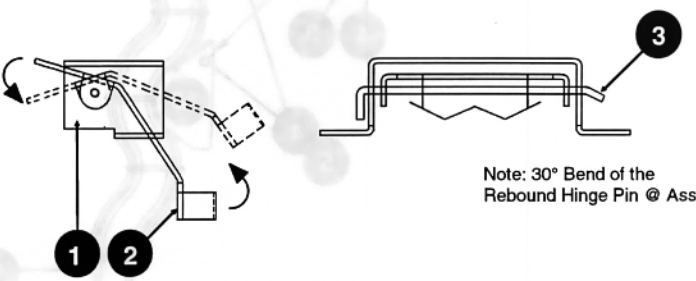

Note: 30° Bend of the Rebound Hinge Pin @ Ass'y.

Item	Description	Part No.
1	Gate Bracket	535-7052-00
2	Flap Gate	535-7053-00

Item	Description	Part No.
3	Rebound Hinge Pin	535-5372-01
	Note: 35° to 40° Actuation	

Wire Ramp with OPTO's Assembly
500-5884-00

Item	Description	Part No.
1	Wire Ramp	515-6161-00
2	Steel Plate	535-7162-00
3	Butyrate Spotlite Sub. Assy.	515-6175-00
4	#6-32 X 3/8 PH (Qty. 7)	232-5201-00
5	3/4 Hex Spacer (Qty. 2)	254-5008-06
6	#6-32 X 1/2 Flathead PH (Qty. 2)	237-5918-00
7	2" Hex Spacer (Qty. 2)	254-5008-18
8	#4-40 X 3/8 PHMS (Qty. 8)	237-5933-00
9	OPTO Transmitter (Qty. 2)	520-5102-00
10	OPTO Receiver (Qty. 2)	520-5103-00
11	Fishpaper (1 behind each OPTO) (Qty. 4)	545-5560-00
12	Screened Paddle Boat	545-5539-02
13	Mini-Mars Snap-in Red (Qty. 2)	550-5030-02
14	Lamplight Deflector	518-5026-11

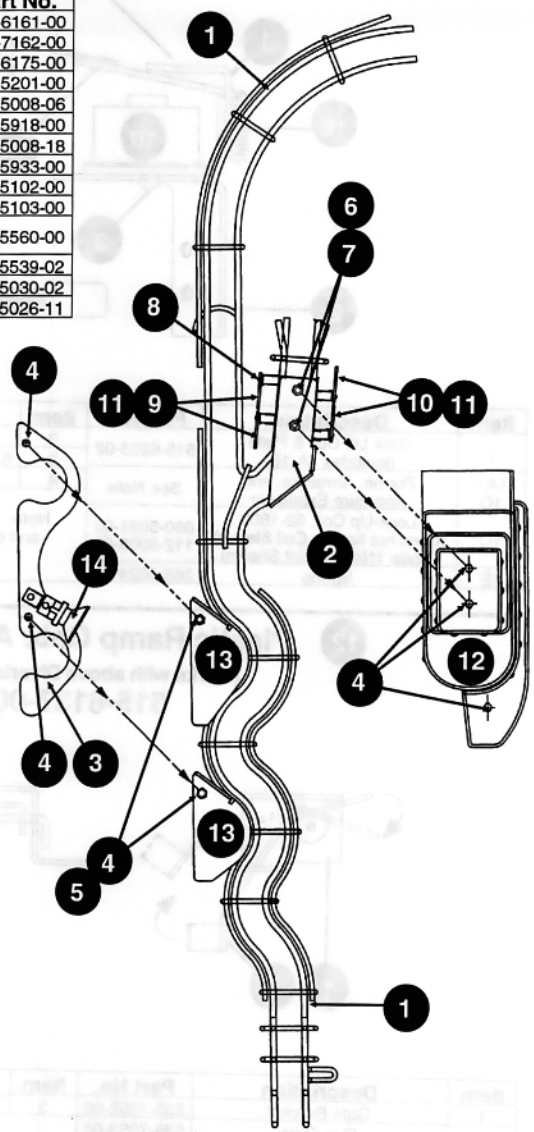

Backpanel Assembly
500-5870-01

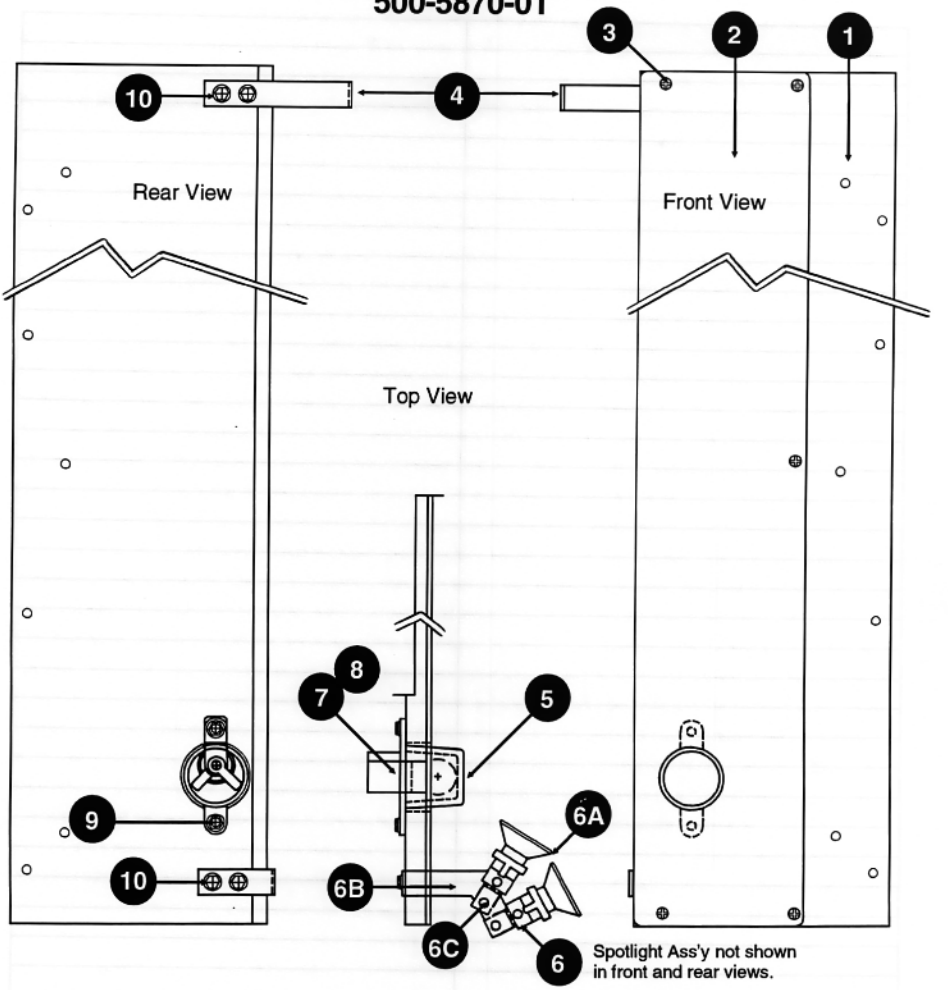

Item	Description	Part No.	Item	Description	Part No.
1	Back Panel	525-5371-01	6A	Lamp Light Deflector (Qty. 2)	518-5026-11
2	Back Panel Butyrate	830-5466-16	6B	Spotlight Bracket	535-7089-00
3	#6 X ½ PH PAN (Qty. 5)	232-5001-00	6C	Rivet (Qty. 2)	249-5008-00
4	Ramp Support Bracket	535-7057-00	7	Socket	077-5101-00
5	Mini-Mars (Flo. Org.)	550-5031-10	8	#89 Bulb	165-5000-89
6	Spotlight Assembly	500-5893-00	9	#6 X ½ HXW Screw (Qty. 2)	234-5001-02
Spotlight Ass'y incl. items 6A-6C in the next column.			10	#8 X ½ HXW Screw (Qty. 4)	234-5101-05

Unique Parts Notes

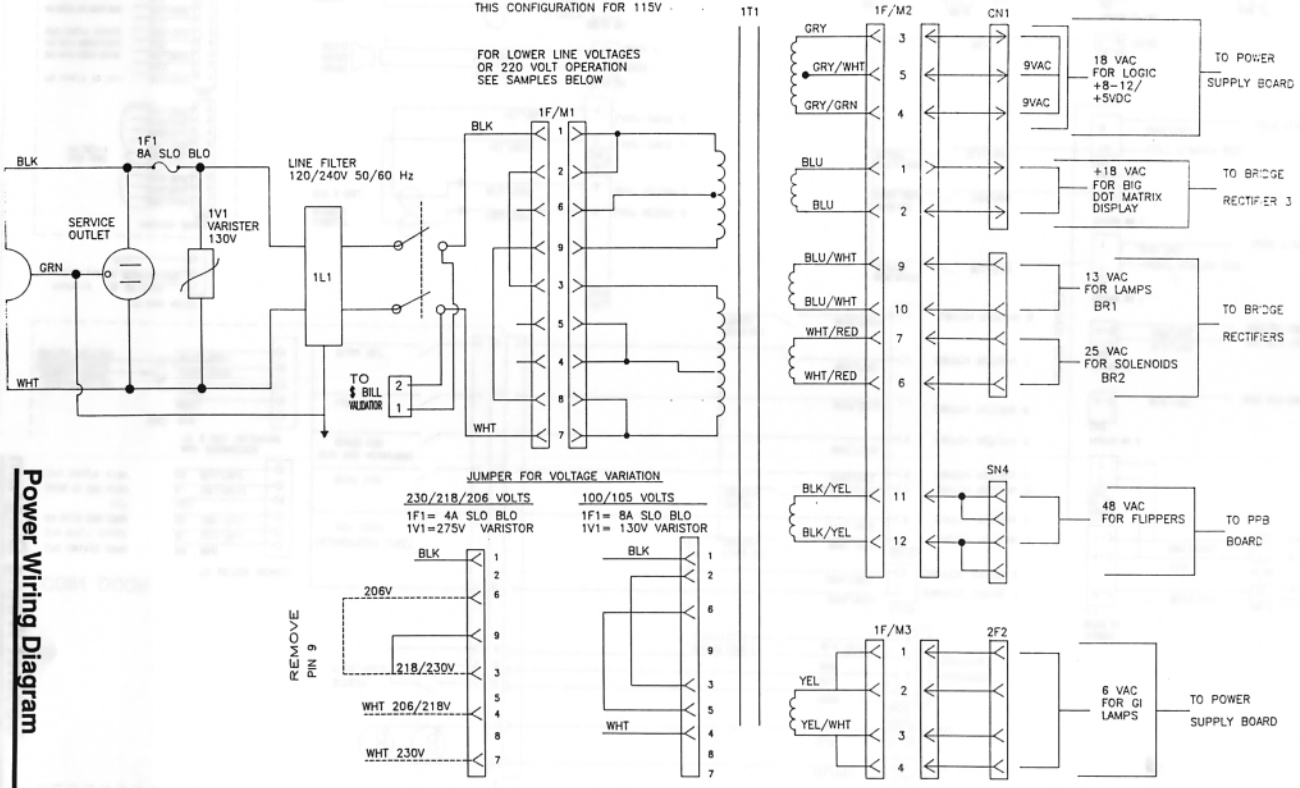

Power Wiring Diagram 69

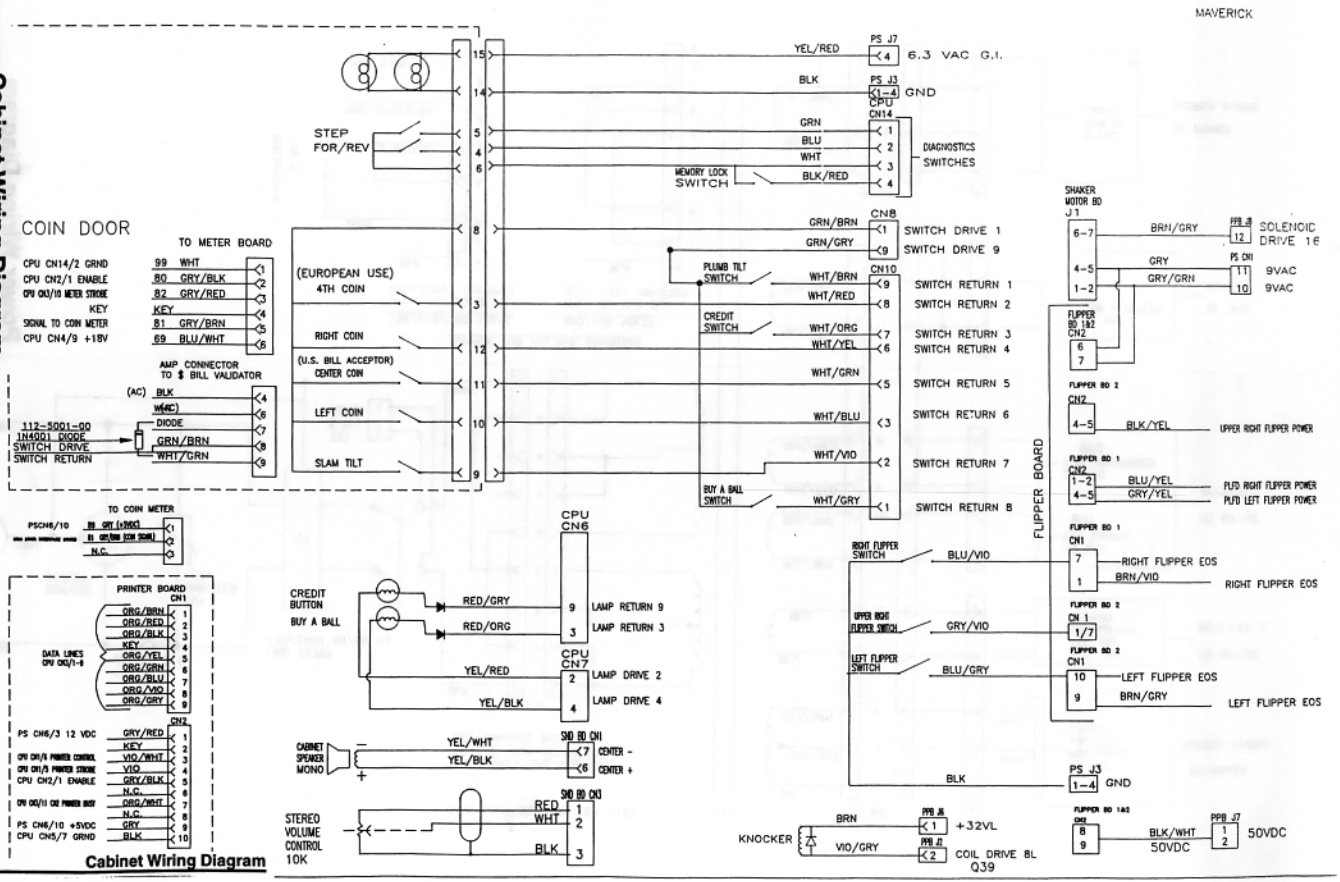
MAVERICK
COIN DOOR
TO METER BOARD
CPU CN14/2 GRND
CPU CN2/1 ENABLE
CPU CN3/10 METER STROKE
KEY
SIGNAL TO COIN METER
CPU CN4/9 +18V
99 WHT
80 GRY/BLK
82 GRY/RED
KEY
81 GRY/BRN
69 BLU/WHT
AMP CONNECTOR TO $ BILL VALIDATOR
(AC) BLK
W(AC)
112-5001-00 1N4001 DIODE
SWITCH DRIVE
SWITCH RETURN
DIODE
GRN/BRN
WHT/GRN
TO COIN METER
PSCN6/10
N.C.
PRINTER BOARD CN1
DATA LINES CPU CN3/1-8
ORG/BRN
ORG/RED
ORG/BLK
KEY
ORG/YEL
ORG/GRN
ORG/BLU
ORG/VIO
ORG/GRY
CN2
PS CN6/3 12 VDC
GRY/RED
KEY
VIO/WHT
VIO
GRY/BLK
N.C.
ORG/WHT
N.C.
GRY
BLK
PS CN6/10 +5VDC
CPU CN5/7 GRND
STEP FOR/REV
(EUROPEAN USE) 4TH COIN
RIGHT COIN
(U.S. BILL ACCEPTOR) CENTER COIN
LEFT COIN
SLAM TILT
CREDIT BUTTON
BUY A BALL
RED/GRY
RED/ORG
CPU CN6
LAMP RETURN 9
LAMP RETURN 3
YEL/RED
YEL/BLK
CPU CN7
LAMP DRIVE 2
LAMP DRIVE 4
CABINET SPEAKER MONO
YEL/WHT
YEL/BLK
SND BD CN1
CENTER -
CENTER +
STEREO VOLUME CONTROL 10K
RED
WHT
BLK
SND BD CN1
YEL/RED
PS J7
6.3 VAC G.I.
BLK
PS J3
1-4
GND
CPU CN14
GRN
BLU
WHT
BLK/RED
DIAGNOSTICS SWITCHES
MEMORY LOCK SWITCH
CN8
GRN/BRN
GRN/GRY
SWITCH DRIVE 1
SWITCH DRIVE 9
PLUMB TILT SWITCH
CN10
WHT/BRN
WHT/RED
WHT/ORG
WHT/YEL
WHT/GRN
WHT/BLU
WHT/VIO
WHT/GRY
SWITCH RETURN 1
SWITCH RETURN 2
SWITCH RETURN 3
SWITCH RETURN 4
SWITCH RETURN 5
SWITCH RETURN 6
SWITCH RETURN 7
SWITCH RETURN 8
CREDIT SWITCH
BUY A BALL SWITCH
FLIPPER BOARD
SHAKER MOTOR BD J1
BRN/GRY
GRY
GRY/GRN
PPB J2
12
SOLENOID DRIVE 16
PS CN1
11
10
9VAC
9VAC
FLIPPER BD 1&2 CN2
FLIPPER BD 2 CN2
BLK/YEL
UPPER RIGHT FLIPPER POWER
FLIPPER BD 1 CN2
BLU/YEL
GRY/YEL
PLFD RIGHT FLIPPER POWER
PLFD LEFT FLIPPER POWER
FLIPPER BD 1 CN1
RIGHT FLIPPER SWITCH
BLU/VIO
RIGHT FLIPPER EOS
BRN/VIO
RIGHT FLIPPER EOS
FLIPPER BD 2 CN 1
UPPER RIGHT FLIPPER SWITCH
GRY/VIO
FLIPPER BD 2 CN1
LEFT FLIPPER SWITCH
BLU/GRY
LEFT FLIPPER EOS
BRN/GRY
LEFT FLIPPER EOS
BLK
PS J3
1-4
GND
KNOCKER
BRN
VIO/GRY
PPB J6
PPB J1
+32VL
COIL DRIVE BL Q39
FLIPPER BD 1&2 CN5
BLK/WHT
50VDC
PPB J7
50VDC

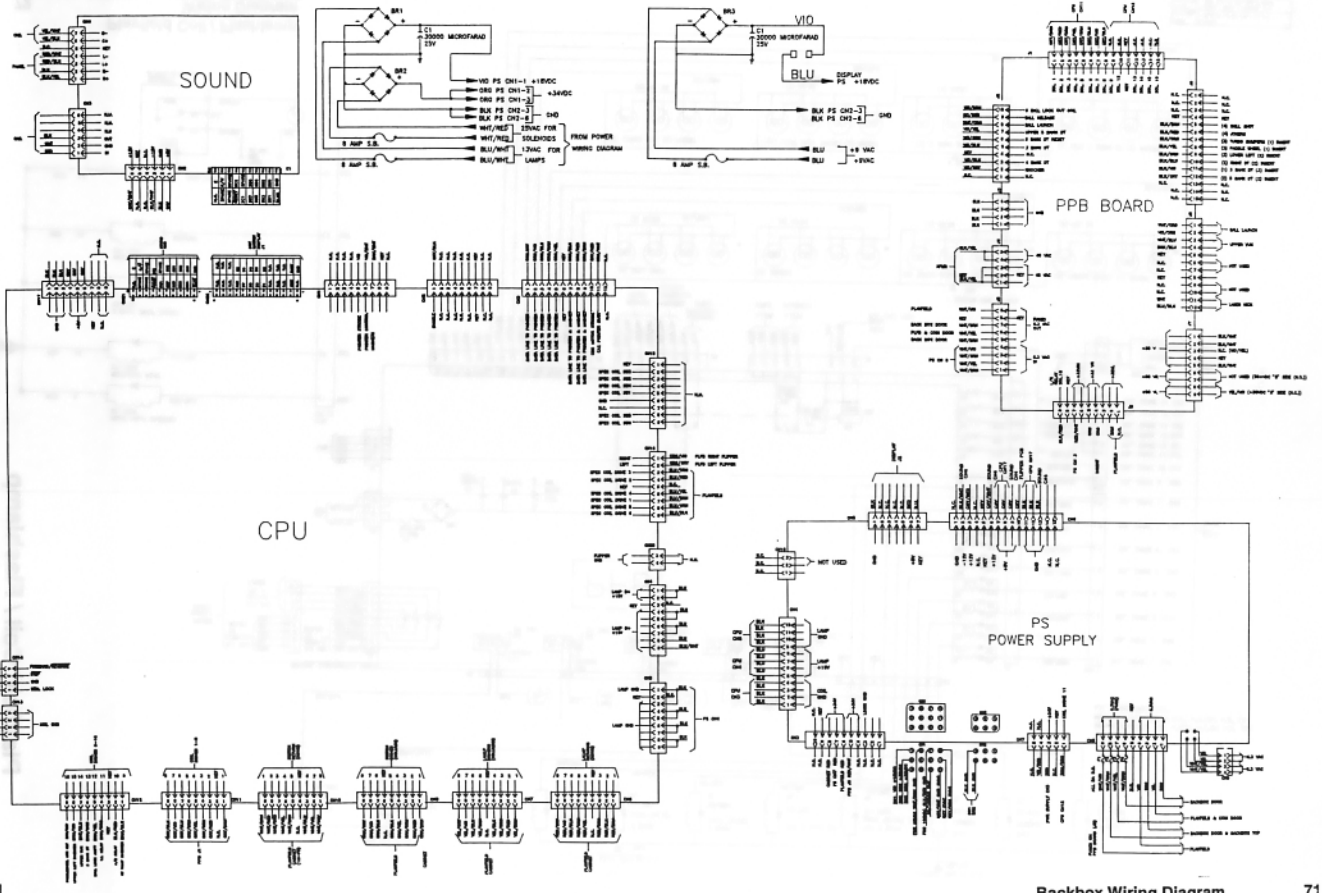

Backbox Wiring Diagram 71

Playfield Coil / Flashlamp Wiring Diagram

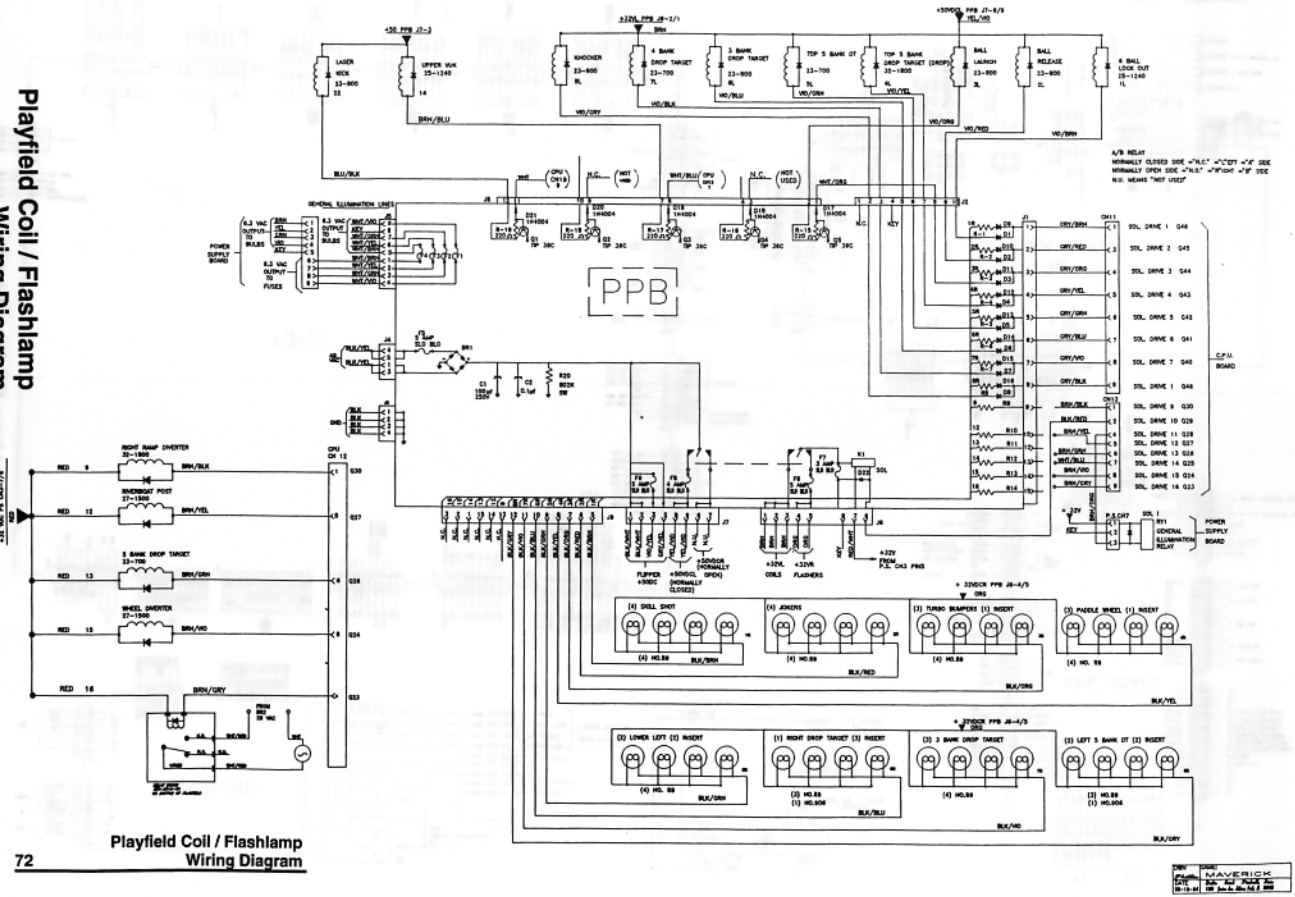

72 Playfield Coil / Flashlamp Wiring Diagram

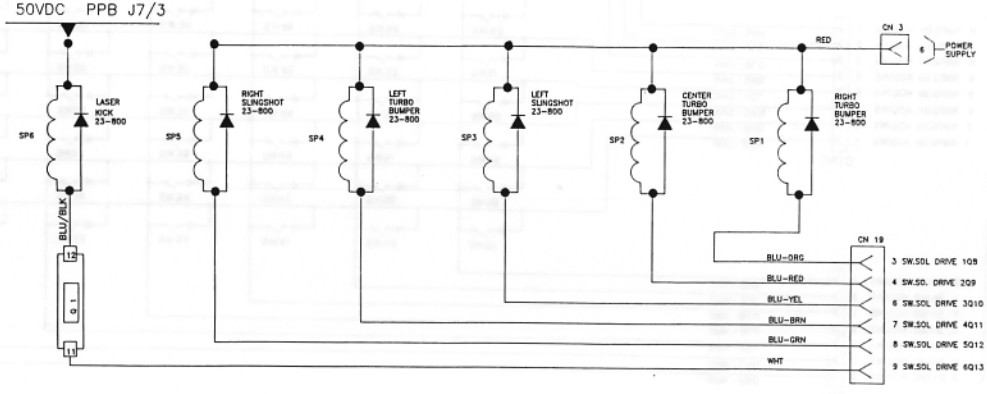
50VDC PPB J7/3
SP6
LASER KICK 23-800
SP5
RIGHT SLINGSHOT 23-800
SP4
LEFT TURBO BUMPER 23-800
SP3
LEFT SLINGSHOT 23-800
SP2
CENTER TURBO BUMPER 23-800
SP1
RIGHT TURBO BUMPER 23-800
RED
CN 3
6
POWER SUPPLY
BLU/BLK
Q 1
CN 19
BLU-ORG
BLU-RED
BLU-YEL
BLU-BRN
BLU-GRN
WHT
3 SW.SOL DRIVE 1Q9
4 SW.SOL DRIVE 2Q9
6 SW.SOL DRIVE 3Q10
7 SW.SOL DRIVE 4Q11
8 SW.SOL DRIVE 5Q12
9 SW.SOL DRIVE 6Q13

Switch Matrix No. & Description	Part No.
01* Plumb Tilt (See Item 17, Cabinet Parts, Page 41)	
02* 4th Coin (On Coin Door)	---
03* Credit Button (Left of Coin Door)	500-5067-02
04* Right Coin (On Coin Door)	180-5024-00
05* Center Coin (On Coin Door)	180-5024-00
06* Left Coin (On Coin Door)	180-5024-00
07* Slam Tilt	180-5022-00
08* Extra Ball Button (Under 03)	180-5073-00
09 Not Used	---
10 Not Used	---
11 #1 (Left) Ball Trough	180-5119-00
12 #2 Ball Trough	180-5119-00
13 #3 Ball Trough	180-5119-00
14 #4 Ball Trough	180-5119-00
15 #5 (Right) Ball Trough	180-5118-00
16 Shooter Lane	180-5100-01
17 Lower Left 5-Bank D.T. Bottom 10♦	180-5104-00

Switch Matrix No. & Description	Part No.
18 Lower Left 5-Bank D.T. Lwr. MID J♦	180-5104-00
19 Lower Left 5-Bank D.T. Middle Q♦	180-5104-00
20 Lower Left 5-Bank D.T. Upr. MID K♦	180-5104-00
21 Lower Left 5-Bank D.T. Top A♦	180-5104-00
22 Center 3-Bank D.T. Left 8♦	180-5104-00
23 Center 3-Bank D.T. Middle 8♦	180-5104-00
24 Center 3-Bank D.T. Right 8♥	180-5104-00
25 Upr. LT 5-Bank Rollover D.T. BOT 3♦	180-5104-00
26 Upr. LT 5-Bank R/O D.T. Lwr. MID 4♦	180-5104-00
27 Upr. LT 5-Bank R/O D.T. Middle 5♦	180-5104-00
28 Upr. LT 5-Bank R/O D.T. Upr. MID 6♦	180-5104-00
29 Upr. LT 5-Bank Rollover D.T. Top 7♦	180-5104-00
30 Captive Ball Stand-Up Target	515-5967-08
31 Vertical Up-Kicker (VUK)	180-5116-00
32 Upper Right Ramp Exit Gate	180-5087-00
33 Right 4-Bank Drop Target Bottom 9♦	180-5104-00
34 Right 4-Bank D.T. Lower Middle 9♦	180-5104-00

Switch Matrix No. & Description	Part No.
35 Right 4-Bank D.T. Upper Middle 9♦	180-5104-00
36 Right 4-Bank Drop Target Top 9♥	180-5104-00
37 Top Lane Left	500-5707-00
38 Top Lane Middle Left	500-5707-00
39 Top Lane Middle Right	500-5707-00
40 Top Lane Right	500-5707-00
41 Left Turbo Bumper	180-5015-01
42 Center Turbo Bumper	180-5015-01
43 Right Turbo Bumper	180-5015-01
44 Right Ramp Entrance Gate	180-5090-00
45 Paddle Wheel Front Lock OPTO Transmitter / Receiver	520-5102-00 / 520-5103-00
46 Paddle Wheel Back Lock OPTO Transmitter / Receiver	520-5102-00 / 520-5103-00
47 Right Return Lane	500-5706-00
48 Not Used	---
49 Right Outlane	500-5706-00

Switch Matrix No. & Description	Part No.
50 Right Ramp Left Stand-Up Target	515-5967-08
51 Right Slingshot	180-5054-00
52 Right Ramp Kick Big Bottom	500-5706-00
53 Right Ramp Skill Shot 1	500-5706-00
54 Right Ramp Skill Shot 2	500-5706-00
55 Right Ramp Skill Shot 3	180-5126-00
56 Paddle Wheel Entrance OPTO Transmitter / Receiver	520-5102-00 / 520-5103-00
57 Left Outlane	500-5707-00
58 Right Ramp Right Stand-Up Target	515-5967-08
59 Left Slingshot	180-5054-00
60 Right Orbit Rollover	500-5707-00
61 Left Orbit Rollunder	180-5090-00
62 Left Return Lane	500-5707-00
63* Lower Left Flipper Cabinet via Q7 (Transistor) on SSFB	180-5124-00
64* Lower & Upper Right Flipper Cabinet via Q5 (Transitor) on SSFB	180-5124-00

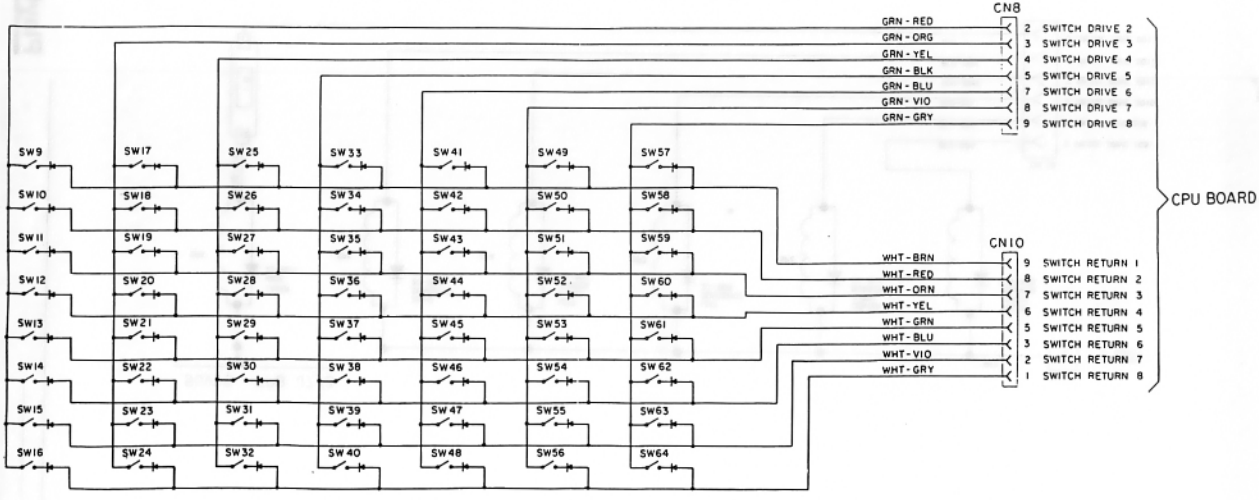

74 Playfield Switch Wiring Diagram

Playfield Switch Wiring Diagram

Lamp Matrix No. & Description	
01	Bank Heist (Captive Ball)
02	Two of Hearts 2♥
03	Three of Hearts 3♥
04	Four of Hearts 4♥
05	Five of Hearts 5♥
06	Six of Hearts 6♥
07	Jack of Spades J♠ ("21")
08	Raise / Fold
09	Shoot Again
10	Lock #3 (Joker)
11	Special
12	Jackpot (RT Ramp Enter Right)
13	Not Used
14	Spot Card (Left)
15	Spot Card (Right)
16	1 (One) Pair
17	21 When Lit

Lamp Matrix No. & Description	
18	Poker Championship
19	Lock #2 (Joker)
20	Coop's Cash
21	Lauren Belle
22	Bank Heist
23	Angel's Revenge
24	Stage Coach
25	(Left) Turbo Bumper
26	(Center) Turbo Bumper
27	(Right) Turbo Bumper
28	Lock #1 (Joker)
29	5 Mil (1) (Left)
30	5 Mil (2) (Middle Left)
31	5 Mil (3) (Middle Right)
32	5 Mil (4) (Right)
33	Skill Shot #1 (Bottom)
34	Skill Shot #2 (Center)

Lamp Matrix No. & Description	
35	Skill Shot #3 (Top)
36	Not Used
37A	Ten of Clubs 10♣
37B	Ten of Diamonds 10♦
38	Extra Ball
39	$ (Right Orbit) (#4)
40	$ (Ramp Enter) (#3)
41	Top Lane 1 ♣
42	Top Lane 2 ♦
43	Top Lane 3 ♦
44	Top Lane 4 ♥
45	Ace of Spades A♠
46A	Ten of Spades 10♠
46B	Ten of Hearts 10♥
47	$ (VUK) (#2)
48	$ (Left Orbit) (#1)
49	Ramp Joker #1 (Bottom)

Lamp Matrix No. & Description	
50	Ramp Joker #2 (Middle)
51	Ramp Joker #3 (Top)
52	Stagecoach (Right Ramp Enter Left)
53	Seven of Clubs 7♣
54	Seven of Diamonds 7♦
55A	Six of Clubs 6♣
55B	Six of Diamonds 6♦
56	Seven of Hearts 7♥
57	4-Of-A-Kind
58	3-Of-A-Kind
59	Straight
60	Royal Flush
61	Two of Diamonds 2♦ (Stand-Up Right)
62	Two of Clubs 2♣ (Stand-Up Left)
63*	Extra Ball Button (Front of Cab.)
64*	Start Button (Front of Cabinet)

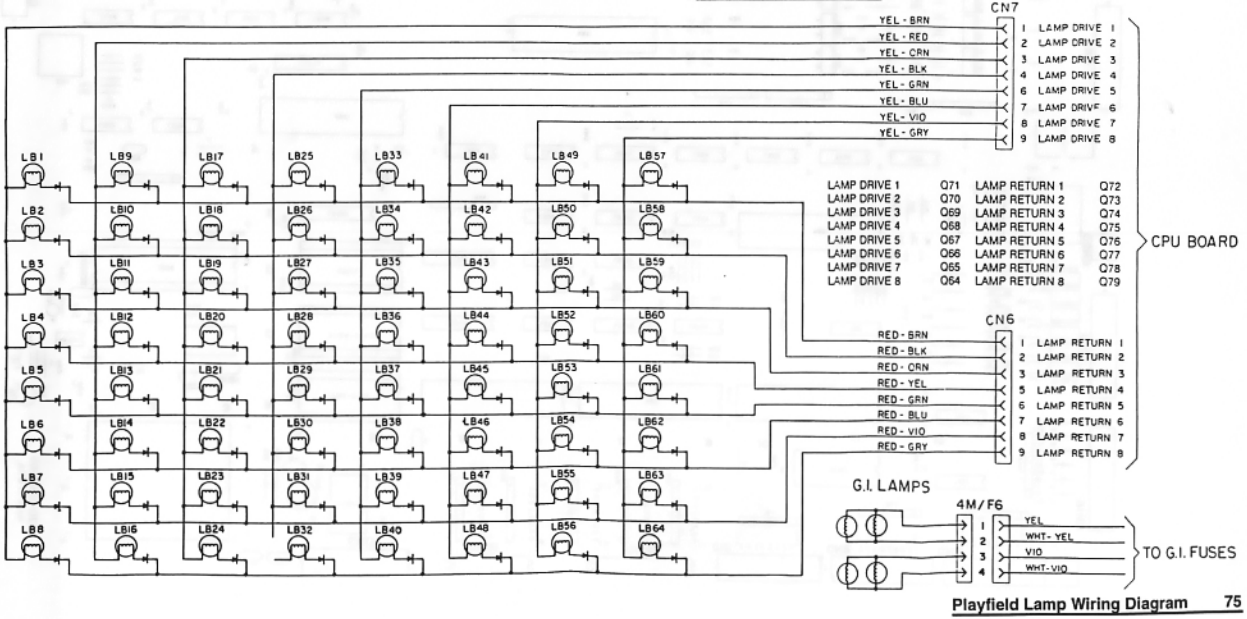

Playfield Lamp Wiring Diagram 75

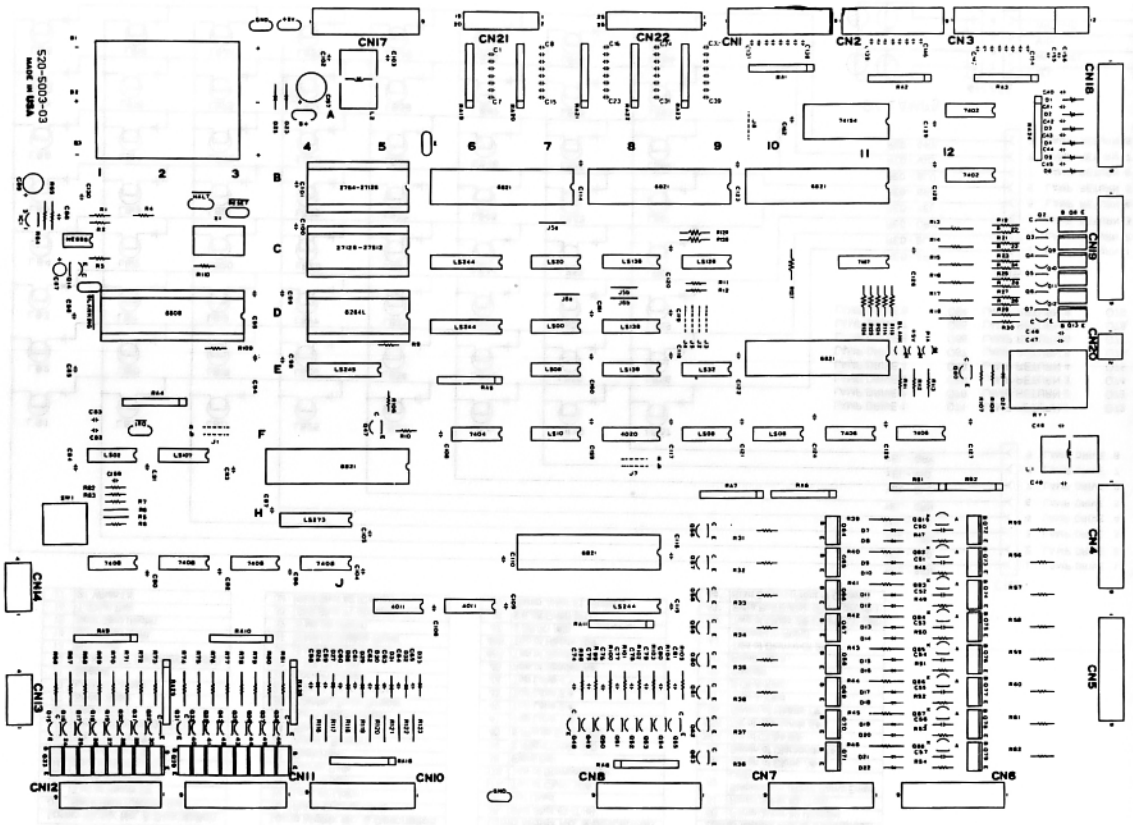

CPU Board Assembly Diagram

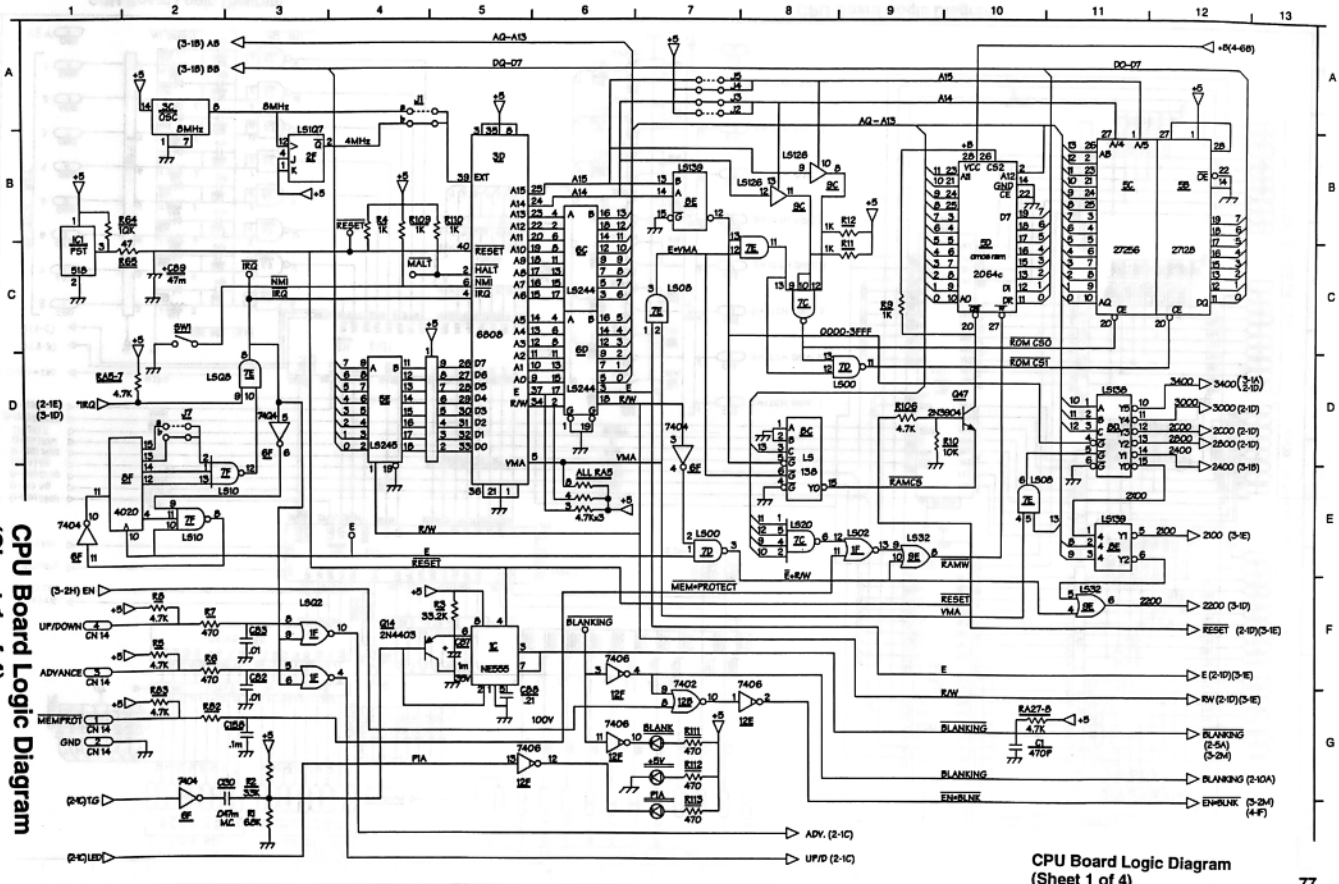

CPU Board Logic Diagram
(Sheet 1 of 4)

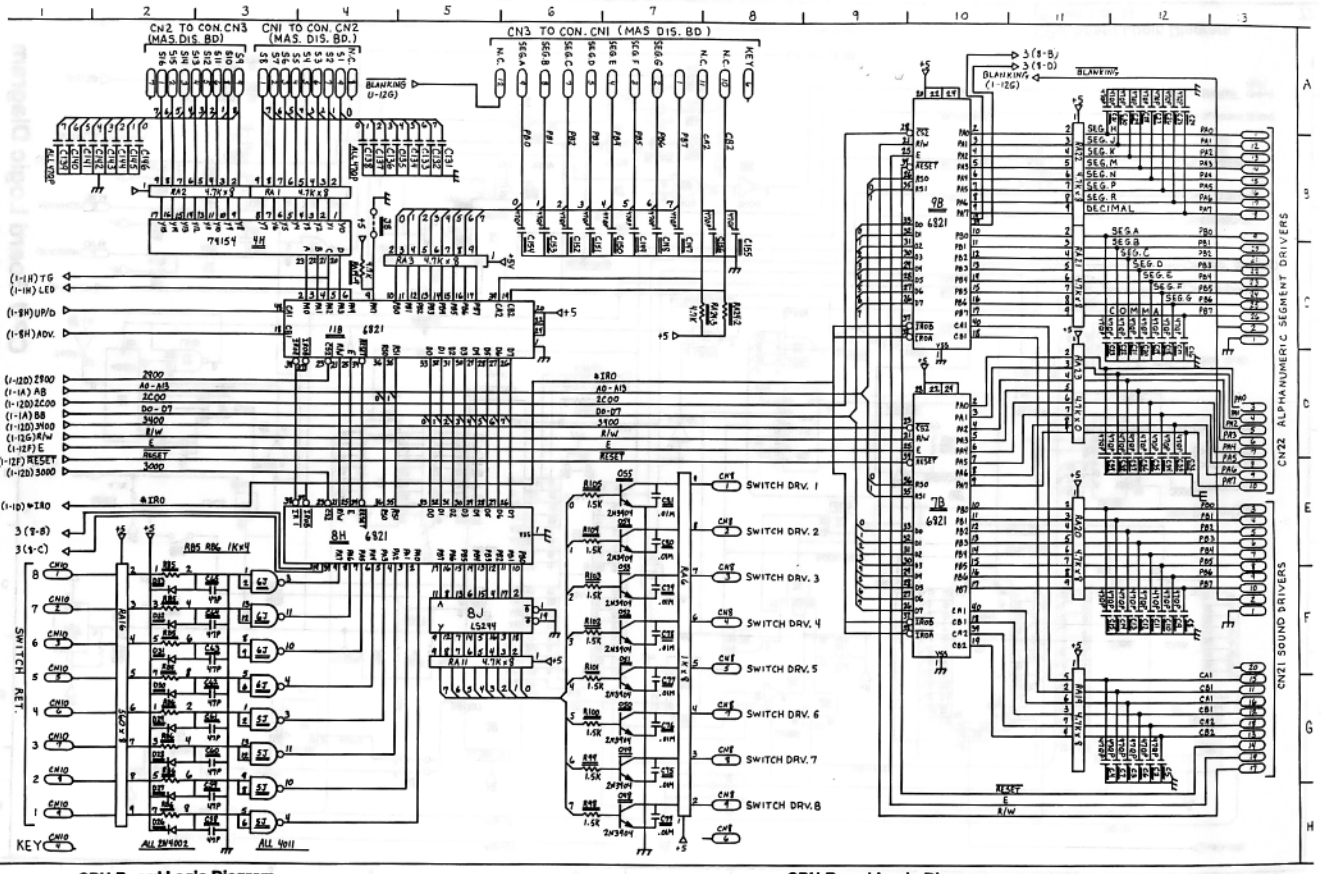

CPU Board Logic Diagram (Sheet 2 of 4)

CPU Board Logic Diagram (Sheet 2 of 4)

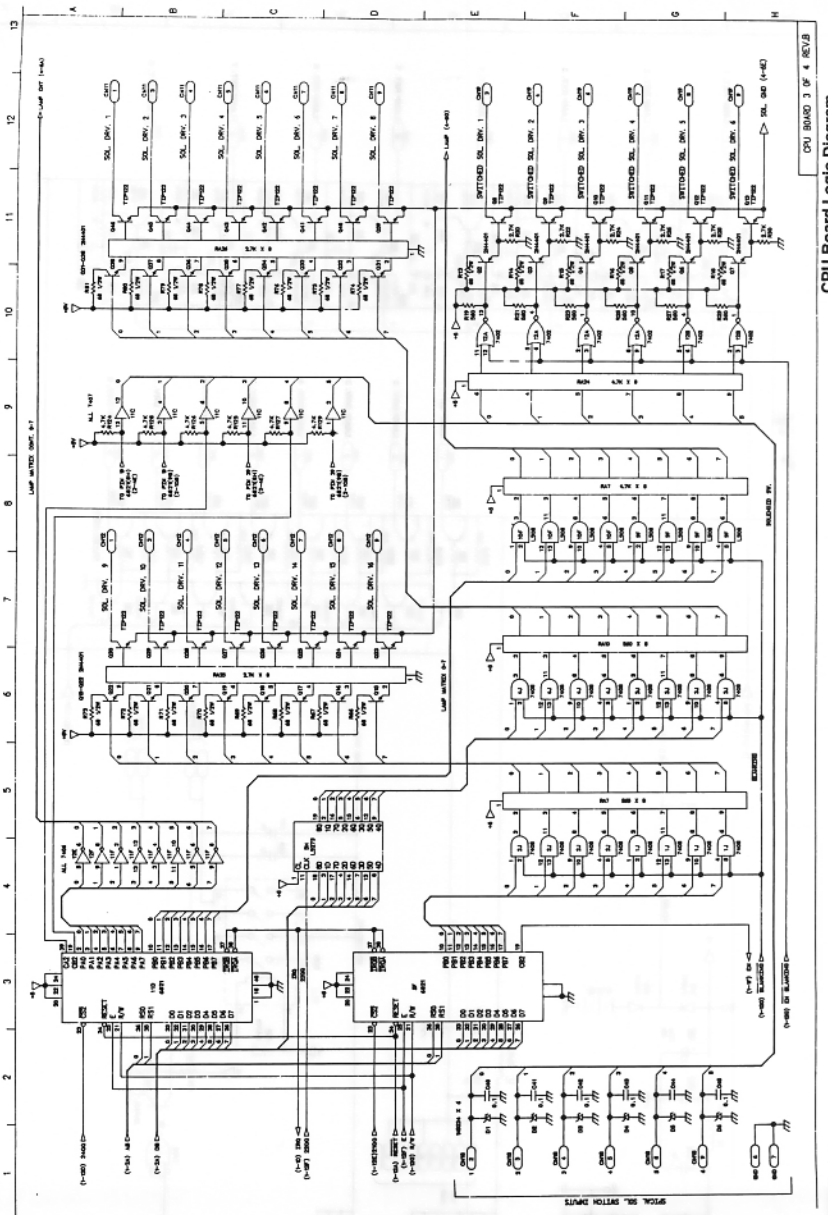

CPU Board Logic Diagram
(Sheet 3 of 4)

CPU Board Logic Diagram (Sheet 4 of 4)

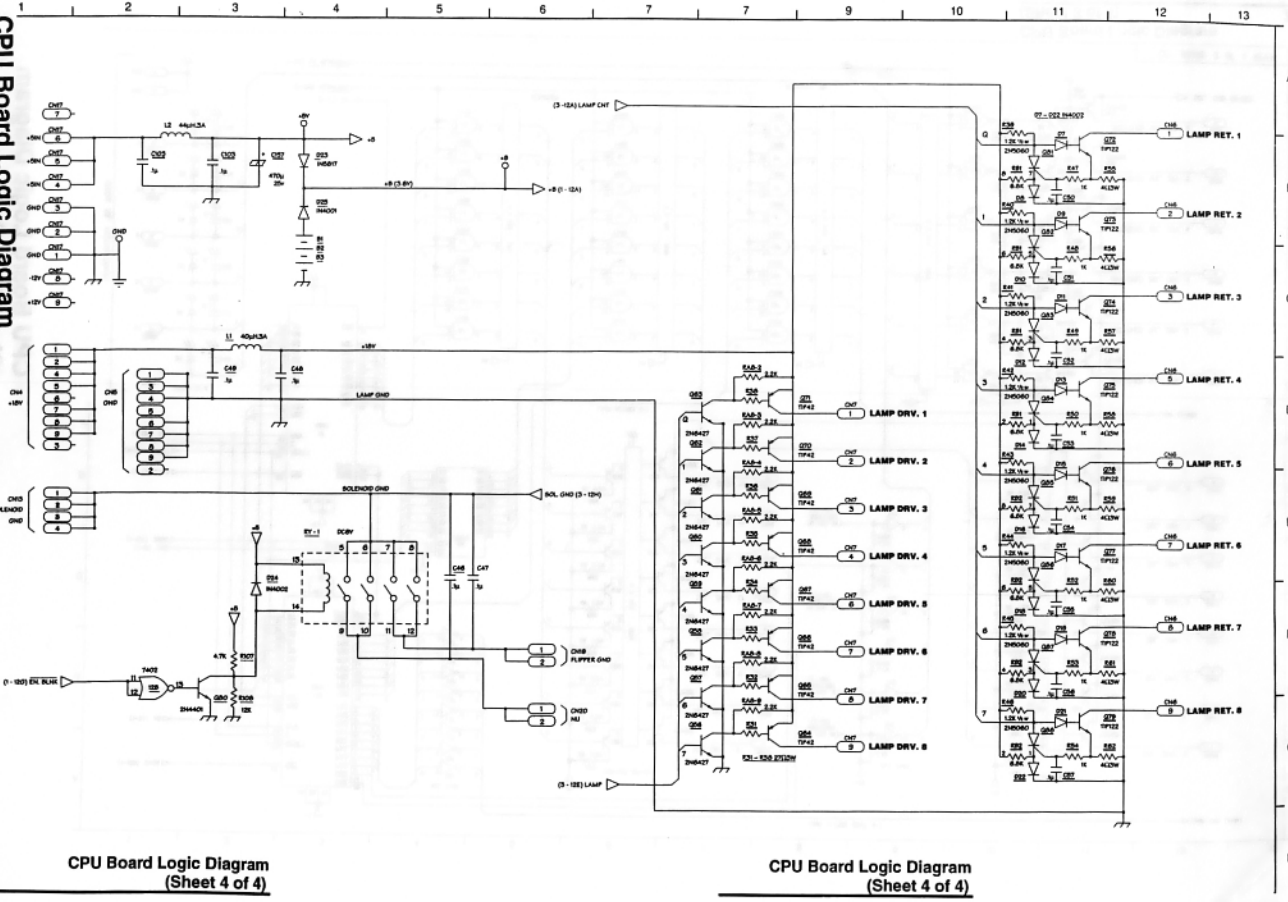

CPU Board Logic Diagram
(Sheet 4 of 4)

80

CPU Board Logic Diagram
(Sheet 4 of 4)

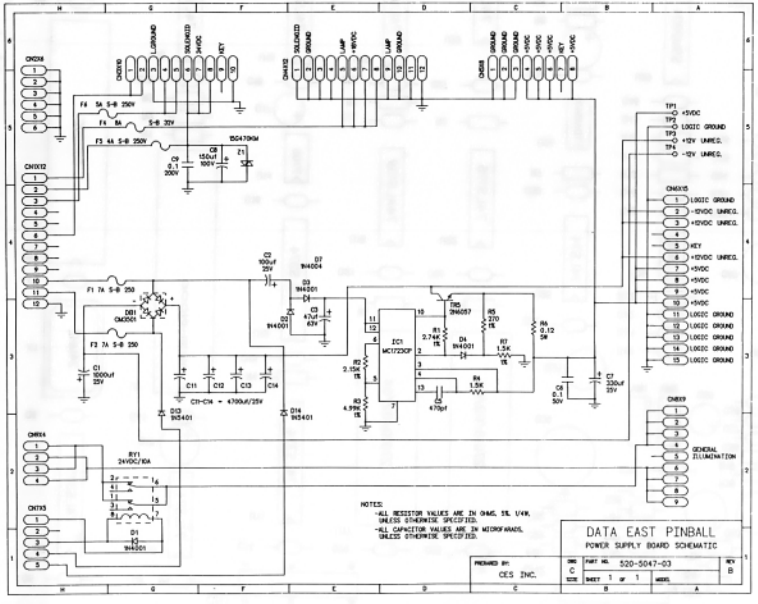
DATA EAST PINBALL
POWER SUPPLY BOARD SCHEMATIC
520-5047-03
CES INC.
NOTES:
-ALL RESISTOR VALUES ARE IN OHMS, 5%, 1/4W, UNLESS OTHERWISE SPECIFIED.
-ALL CAPACITOR VALUES ARE IN MICROFARADS, UNLESS OTHERWISE SPECIFIED.
CNDX4
CNDX12
CNDX5
CNDX9
CNDX6
CNDX3
TP1 +5VDC
TP2 LOGIC GROUND
TP3 +12V UNREG.
TP4 -12V UNREG.
GENERAL ILLUMINATION

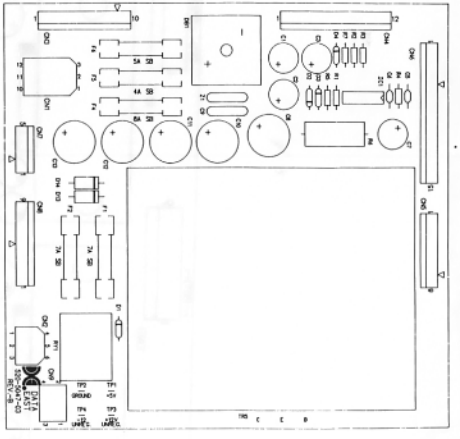

74LS574
4020
74LS163
6116/6264
74LS373
24MHZ
68B09E
27512
74LS273
74LS240
8051-ROM
74LS374
74LS374
74LS374
7705
74LS374
74LS374
CN1
27010/02/04
74LS139
PAL16L8
PAL16L8
74LS374
27010/02/04
74LS175
74LS165
74LS165
74LS374
74LS374
TDA1543
74LS374
LM833
SSM2024
LM833
LM833
DATA EAST
520-5050-00 REV.-C
CN2
CN4
CN3
SP1
SP2
SP3
POT

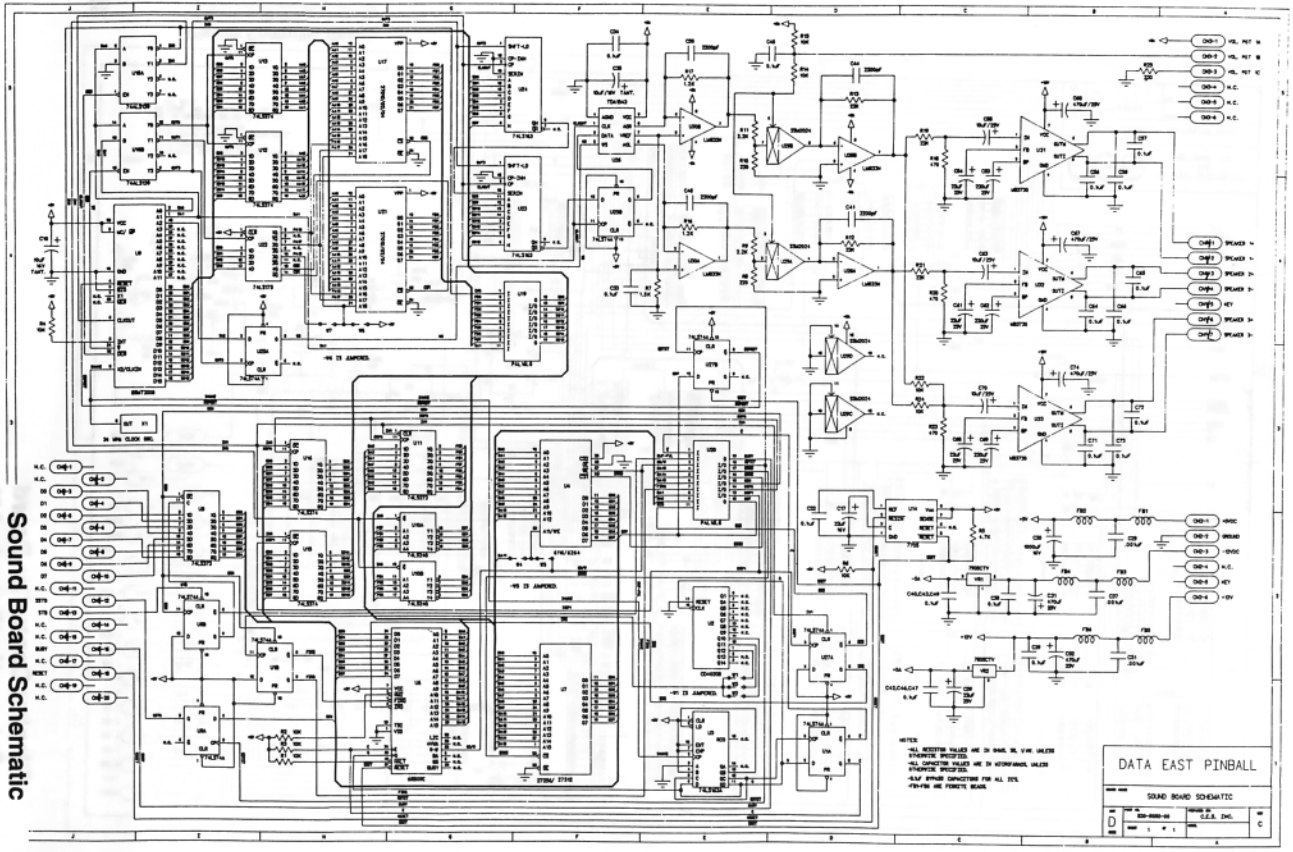

Sound Board Schematic
(520-5050-03)

Sound Board Schematic
(520-5050-03)

83

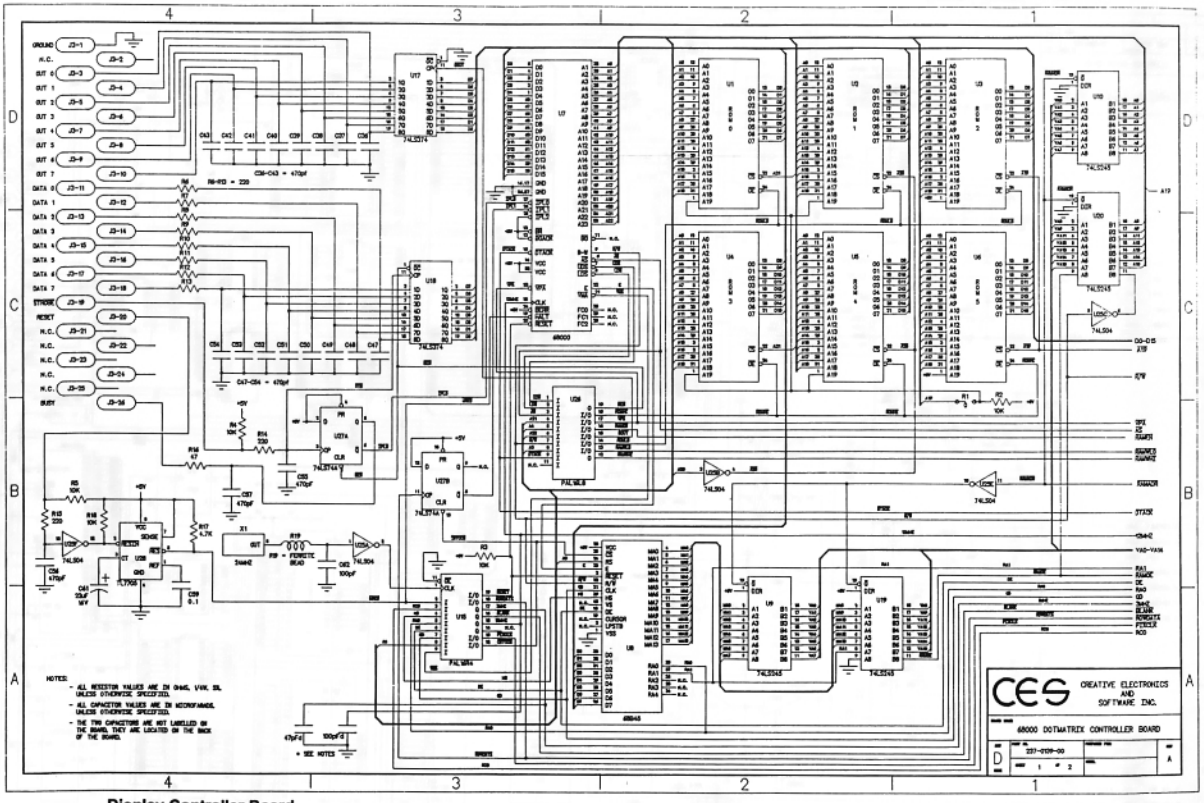
CES
CREATIVE ELECTRONICS AND SOFTWARE INC.
68000 DOTMATRIX CONTROLLER BOARD
NOTES:
- ALL RESISTOR VALUES ARE IN OHMS, 1/4W, 5%, UNLESS OTHERWISE SPECIFIED.
- ALL CAPACITOR VALUES ARE IN MICROFARADS, UNLESS OTHERWISE SPECIFIED.
- THE TWO CAPACITORS ARE NOT LABELLED ON THE BOARD. THEY ARE LOCATED ON THE BACK OF THE BOARD.

Display Driver, Dwg. 1 (Cherry) 87

Display Driver, Dwg. 1 (Cherry) 87

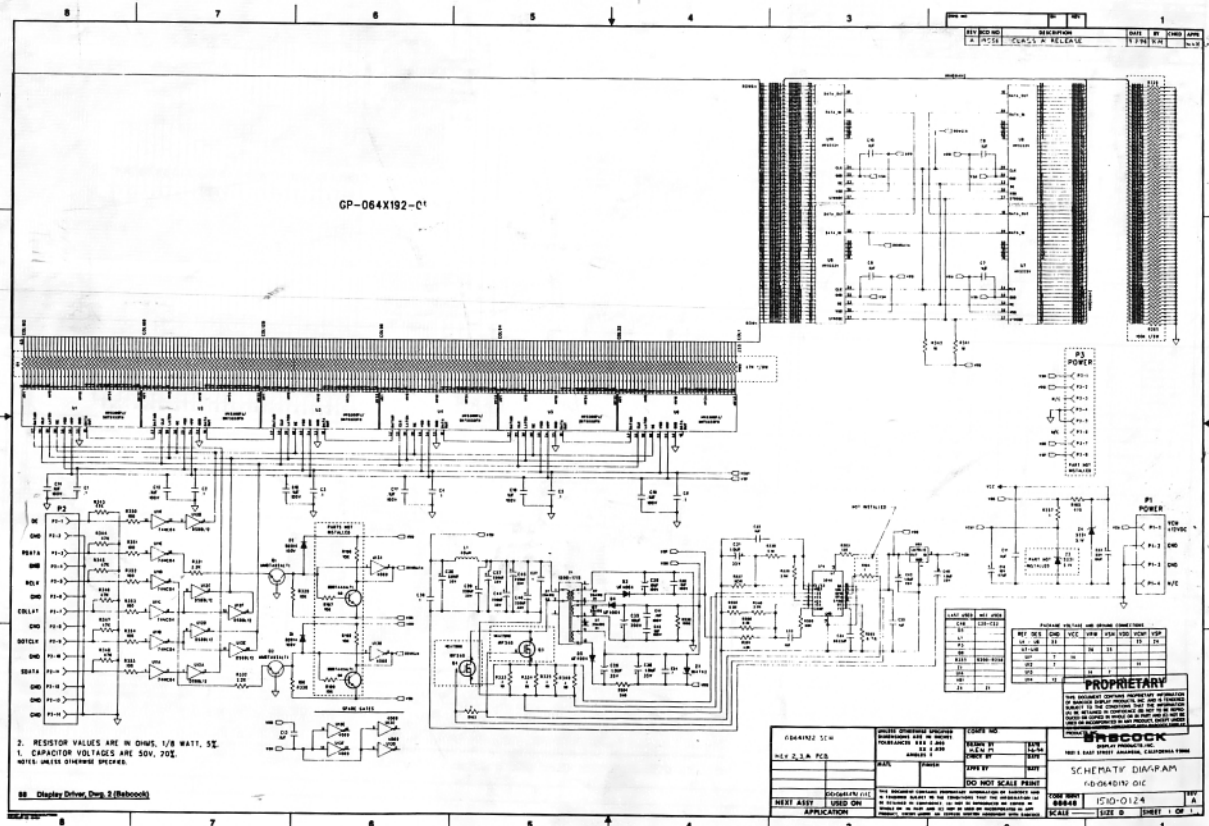
GP-064X192-01
P2
P3
POWER
P1
POWER
2. RESISTOR VALUES ARE IN OHMS, 1/8 WATT, 5%.
1. CAPACITOR VOLTAGES ARE 50V, 20%.
NOTES: UNLESS OTHERWISE SPECIFIED.
88 Display Driver, Dwg. 2 (Babcock)
PROPRIETARY
BABCOCK
SCHEMATIC DIAGRAM
1510-0124

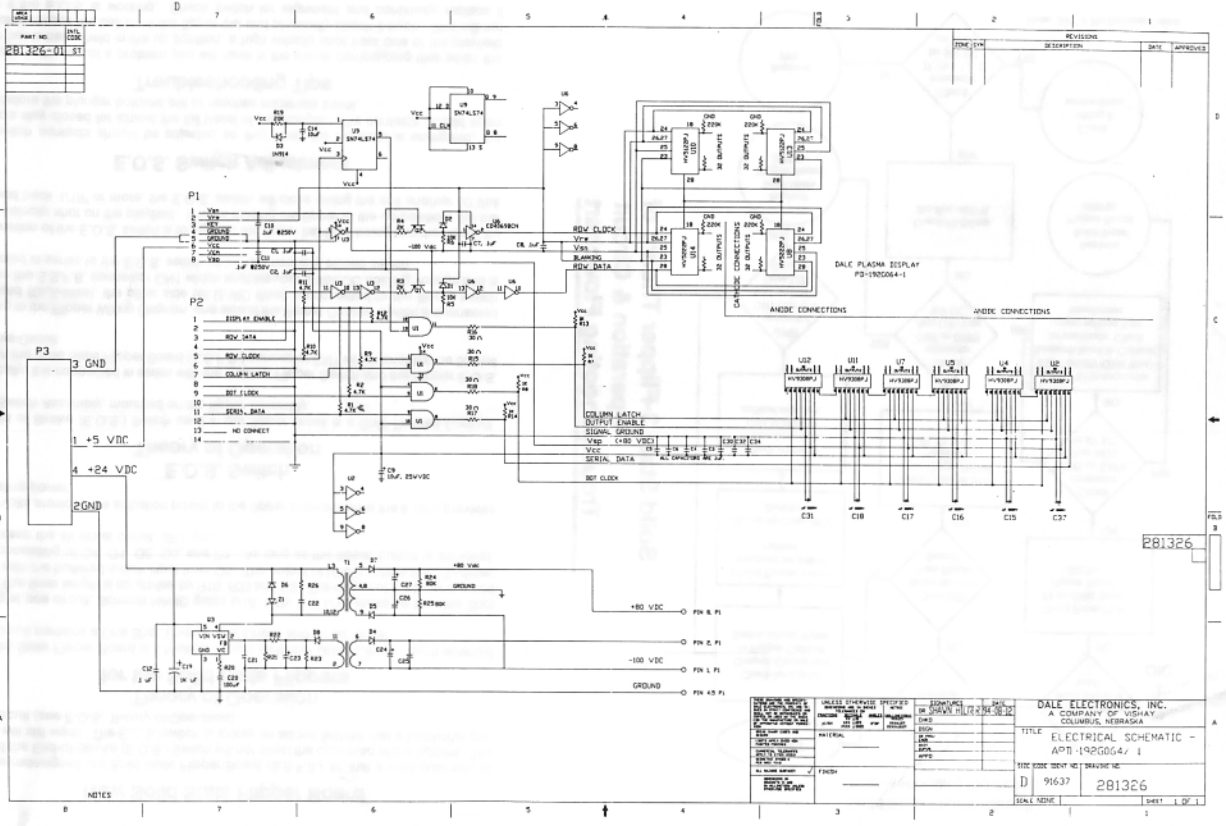
PART NO. 281326-01
REVISIONS
DESCRIPTION
DATE
APPROVED
P1
P2
P3
3 GND
1 +5 VDC
4 +24 VDC
2GND
DISPLAY ENABLE
ROW DATA
ROW CLOCK
COLUMN LATCH
DOT CLOCK
SERIAL DATA
NO CONNECT
BLANKING
COLUMN LATCH
OUTPUT ENABLE
SIGNAL GROUND
SERIAL DATA
DOT CLOCK
DALE PLASMA DISPLAY
P3-192G064-1
ANODE CONNECTIONS
CATHODE CONNECTIONS
+80 VDC
-100 VDC
GROUND
PIN 8, P1
PIN 2, P1
PIN 1, P1
PIN 45 P1
281326
DALE ELECTRONICS, INC.
A COMPANY OF VISHAY
COLUMBUS, NEBRASKA
TITLE
ELECTRICAL SCHEMATIC -
APT-192G064/ 1
SIZE
CODE IDENT NO.
DRAWING NO.
D
91637
281326
SCALE NONE
SHEET 1 OF 1
NOTES

New Solid State Flipper Board

We have redesigned our Solid State Flipper Board (S.S.F.B.) so that a misadjustment or failure of the End-of-Stroke (E.O.S.) Switch will not affect the operation of the flippers. The flippers will still work! The E.O.S. switch is strictly an added feature, not a functional part of the circuit (see E.O.S. Theory of Operation).

Theory of Operation for the Solid State Flippers

The Solid State Flipper Board is a Multiple Flipper Solenoid Driver Circuit. Each solenoid driver circuit contains a One Shot Timer, a 50V Driver, and an 8V Driver.

Looking at one circuit, Schmidt NAND gates U1A, U1b, and U1D make up the One Shot Timer. The timer length is controlled by R10, R33 and C2. The output of the timer is gated at U1C with the buffered switch input from Q6. The output of U1C controls the 50V driver circuit consisting of Q4, Q1, Q2, Q3, and D1. As long as the flipper button is activated, Q6 will keep the 8V driver circuit, SR1, on.

The 50 volts provides the actuation power to the flipper solenoid while the 8 volts provides the holding power.

E.O.S. Switch Theory of Operation

The End of Stroke (E.O.S.) Switch used in our flipper circuit is a Gold Peened Contact, Blade Switch Assembly, mounted on the flipper assembly.

Electrically, it is connected in series with the Cabinet Flipper Switch and the Flipper E.O.S. input on the Solid State Flipper Board (S.S.F.B.) connector CN1 which enables the 50 Volt DC Drive Circuit.

Refering to the Flipper Wiring Diagram, one side of the Flipper Cabinet Switch is connected to ground (BLK-Wire), the other side (BLU-VIO Wire) is connected to the flipper switch input on the S.S.F.B. connector CN1 which enables your 9 Volt DC holding voltage and is connected in series to the E.O.S. switch which is a normally closed switch.

The function of the E.O.S. switch is to prevent the flipper bat from being knocked back by a high velocity shot on the playfield. If while holding the flipper in the up position, the bat is moved back 1/16" or more, the E.O.S. switch will close giving the coil another 50 Volt pulse.

E.O.S. Switch Adjustment

The switch contacts should be adjusted so that when the solenoid is energized, the contacts stay closed for almost the full travel of the plunger. The contacts should open 1/16" before the plunger bottoms out or reaches maximum travel.

Troubleshooting Tips

The only indication of a problem you will have is the player complaining that when the flipper bat is being held in the up position, a high velocity shot from one of the playfield solenoids causes the ball to hit the flipper bat and physically knock it back. This will not occur if the E.O.S. is working. Check switch for alignment and continuity, replace if necessary.

Solid State 3-Flipper Theory of Operation & Circuit Troubleshooting Flowchart

Solid State Flipper Circuit Troubleshooting Flowchart

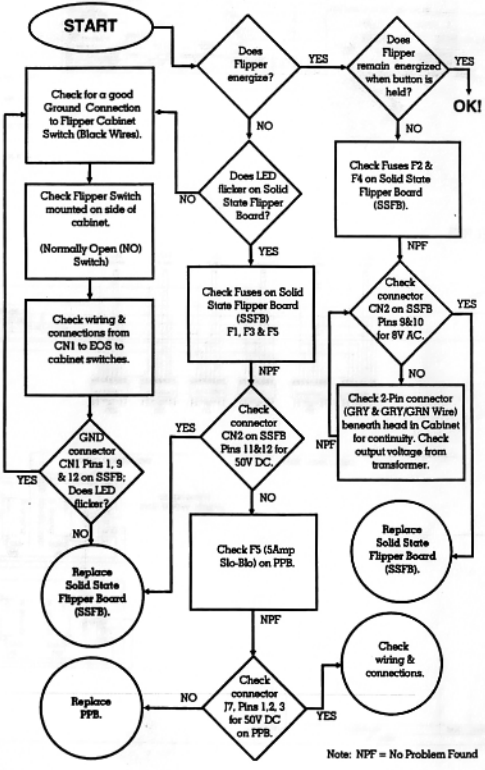

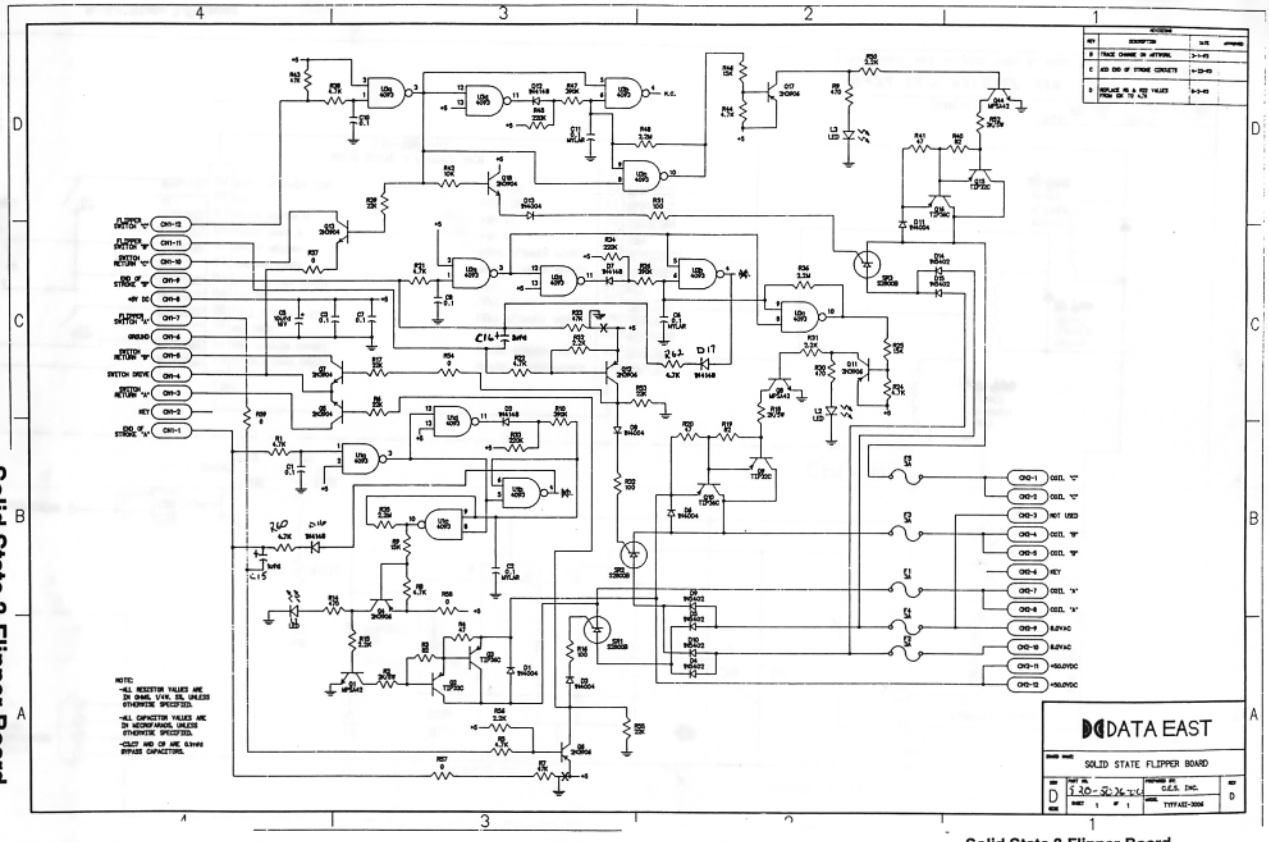

Solid State 3-Flipper Board Diagram 91

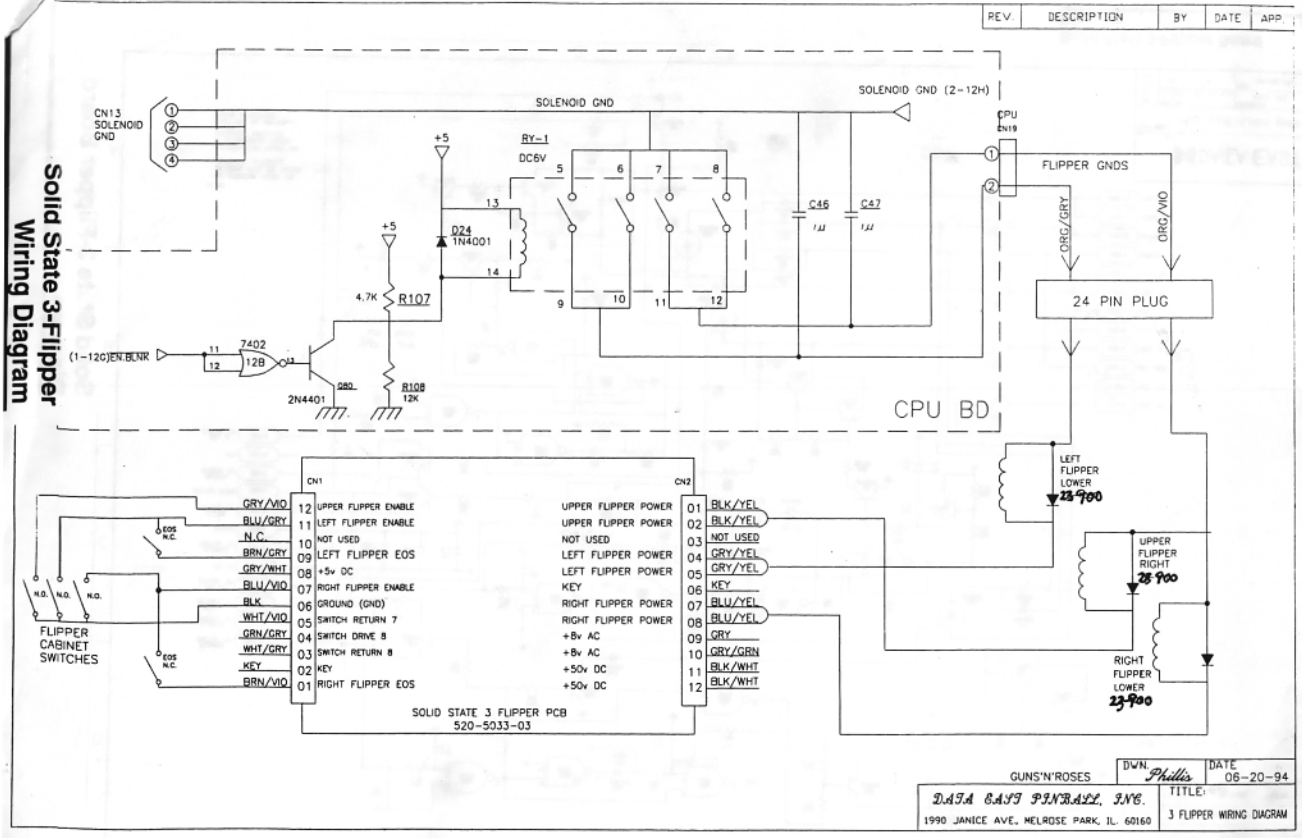
REV.
DESCRIPTION
BY
DATE
APP.
CN13
SOLENOID
GND
SOLENOID GND
SOLENOID GND (2-12H)
CPU
CN19
FLIPPER GNDS
RY-1
DC6V
+5
D24
1N4001
4.7K
R107
R108
12K
2N4401
Q80
7402
12B
(1-12G)EN.BLNK
C46
1µ
C47
1µ
ORG/GRY
ORG/VIO
24 PIN PLUG
CPU BD
LEFT
FLIPPER
LOWER
23-900
UPPER
FLIPPER
RIGHT
23-900
RIGHT
FLIPPER
LOWER
23-900
CN1
CN2
GRY/VIO
BLU/GRY
N.C.
BRN/GRY
GRY/WHT
BLU/VIO
BLK
WHT/VIO
GRN/GRY
WHT/GRY
KEY
BRN/VIO
EOS N.C.
N.O.
FLIPPER
CABINET
SWITCHES
12 UPPER FLIPPER ENABLE
11 LEFT FLIPPER ENABLE
10 NOT USED
09 LEFT FLIPPER EOS
08 +5v DC
07 RIGHT FLIPPER ENABLE
06 GROUND (GND)
05 SWITCH RETURN 7
04 SWITCH DRIVE 8
03 SWITCH RETURN 8
02 KEY
01 RIGHT FLIPPER EOS
UPPER FLIPPER POWER
UPPER FLIPPER POWER
NOT USED
LEFT FLIPPER POWER
LEFT FLIPPER POWER
KEY
RIGHT FLIPPER POWER
RIGHT FLIPPER POWER
+8v AC
+8v AC
+50v DC
+50v DC
01 BLK/YEL
02 BLK/YEL
03 NOT USED
04 GRY/YEL
05 GRY/YEL
06 KEY
07 BLU/YEL
08 BLU/YEL
09 GRY
10 GRY/GRN
11 BLK/WHT
12 BLK/WHT
SOLID STATE 3 FLIPPER PCB
520-5033-03
GUNS'N'ROSES
DWN. Phillis
DATE 06-20-94
DATA EAST PINBALL, INC.
1990 JANICE AVE., MELROSE PARK, IL. 60160
TITLE:
3 FLIPPER WIRING DIAGRAM

BACKBOX LAYOUT, FUSE & RELAY LOCATIONS

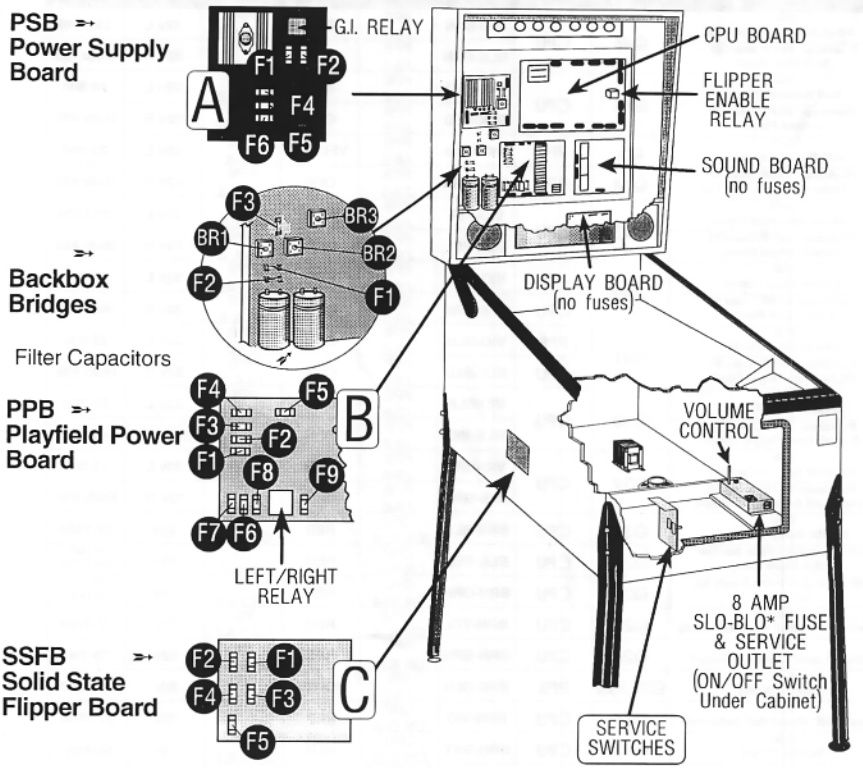

Note: Backbox Part Numbers on Page 38.

A: In the Backbox	
Power Supply Board PSB	
F1	7A Slo-Blo +5vDC Regulator Input (9vAC)
F2	7A Slo-Blo +5vDC Regulator Input (9vAC)
F3	Not Used
F4	8A Slo-Blo Switched Illum'tion Buss (18vDC)
F5	4A Slo-Blo Solenoid (32vDC) Bumpers, Sling-shots, etc.
F6	5A Slo-Blo Solenoid Buss (34vDC) L/R Relay Coils/Flash

B: In the Backbox	
Playfield Power Board PPB	
F1	G.I. 5A Slo-Blo Playfield
F2	G.I. 5A Slo-Blo Backbox Dr./Spkr. Panel
F3	G.I. 5A Slo-Blo Playfield & Coin Door
F4	G.I. 5A Slo-Blo Backbox Door
F5	50v 5A Flippers /All 50v Coils
F6	32v Flash Lamps 3A Slo-Blo/Right
F7	32v 3A Coils/Flash Right/Left
F8	50v 4A / 50v Coils
F9	50v 5A Laser Kick

C: In the Cabinet	
Solid State 3-Flipper Bd. SSFB	
F1	3A 250v Slo-Blo 50v DC Output (All Fuses) Lower Right Flipper
F2	3A 250v Slo-Blo 9v AC Holding
F3	3A 250v Slo-Blo 50v DC Output Left Flipper
F4	3A 250v Slo-Blo 9v AC Holding
F5	3A 250v Slo-Blo 50v DC Output Upper Right Flipper

In the Backbox	
Backbox Bridges Mounted in Backbox	
F1	8A Slo-Blo 32v DC BR2 Coils/Flashers
F2	8A Slo-Blo 18v DC BR1 Lamps
F3	8A Slo-Blo 18v DC BR3 Display
Cabinet Fuses	
Main Fuse Line: 8A Slo-Blo 250v	
International 2X 4A Slo-Blo 250v	

Switched, CPU Controlled Auxillary & Constant Power Solenoids

Coil No.	Coil or Flashlamp Description	Drive Transistor (D.T.)	On Which Board?	D.T. Control Line	D.T. Control Line Connect	Power Line	Power Line Connnection	Power Description	Coil or Flash Type
1L	Coil: 4-Ball Assembly Lockout	Q46	CPU	VIO-BRN	PPB J 2-1	BRN	PPB J 6-1, 2	32v L	25-1240
1R	Flashlamp: X4 P/F, Insert X0 Skill Shot Flash			BLK-BRN	PPB J 9-1	ORN	PPB J 6-4, 5	32v R	Bulb #89
2L	Coil: Ball Release (Eject)	Q45	CPU	VIO-RED	PPB J 2-2	BRN	PPB J 6-1, 2	32v L	23-800
2R	Flashlamp: X4 P/F, Insert X0 Jokers Flash			BLK-RED	PPB J 9-2	ORN	PPB J 6-4, 5	32v R	Bulb #89
3L	Coil: Skill Shot Launch 50v	Q5	PPB	VIO-ORN	PPB J 8-2	YEL/VIO	PPB J 7-8	50v L	23-800
3R	Flashlamp: X3 P/F, Insert X1 Turbo Bumpers Flash	Q44	CPU	BLK-ORN	PPB J 9-3	ORN	PPB J 6-4, 5	32v R	Bulb #89
4L	Coil: 5-Bank Autodrop Down	Q43	CPU	VIO-YEL	PPB J 2-4	BRN	PPB J 6-1, 2	32v L	32-1800
4R	Flashlamp: X3 P/F, Insert X1 Paddle Wheel Flash			BLK-YEL	PPB J 9-4	ORN	PPB J 6-4, 5	32v R	Bulb #89
5L	Coil: 5-Bank Drop Target	Q42	PPB	VIO-GRN	PPB J 8-4	BRN	PPB J 7-8	32v L	23-700
5R	Flashlamp: X2 P/F, Insert X2 Lower Left Flash		CPU	BLK-GRN	PPB J 9-5	ORN	PPB J 6-4, 5	32v R	Bulb #89
6L	Coil: 3-Bank Drop Target	Q41	PPB	VIO-BLU	PPB J 8-7	BRN	PPB J 7-8	32v L	23-800
6R	Flashlamp: X2 P/F, Insert X2 Right Drop Target Flash		CPU	BLK-BLU	PPB J 9-6	ORN	PPB J 6-4, 5	32v R	Bulb #89
7L	Coil: 4-Bank Drop Target	Q40	CPU	VIO-BLK	PPB J 2-8	BRN	PPB J 6-1, 2	32v L	23-700
7R	Flashlamp: X1 P/F, Insert X3 3-Bank Drop Target Flash			BLK-VIO	PPB J 9-7	ORN	PPB J 6-4, 5	32v R	Bulb #89
8L	Coil: Knocker 32v (In Cabinet)	Q39	CPU	VIO-GRY	PPB J 2-8	BRN	PPB J 6-1, 2	32v L	23-800
8R	Flashlamp: X2 P/F, Insert X2 Lower Left 5-Bank D.T. Flash			BLK-GRY	PPB J 9-8	ORN	PPB J 6-4, 5	32v R	Bulb #89
09	Coil: Plastic Ramp Diverter	Q30	CPU	BRN-BLK	CPU CN 12-1	RED	PS CN 3-6,7	32v	32-1800
10	Coil: Located on PPB In Backbox Left & Right Relay	Q29	CPU	BLK-RED	CPU CN 12-5	RED	PS CN 6-7	32v	24v DC 10A DPDT
11	Coil: Located on Power Supply Bd. G.I. Relay	Q28	CPU	BRN-ORN	CPU CN 12-4	RED	PS CN 3-6,7	32v	24v DC 10A DPDT
12	Coil: Riverboat Post Ball Lock Assembly	Q27	CPU	BRN-YEL	CPU CN 12-5	RED	PS CN 3-6,7	32v	27-1500
13	Coil: 5-Bank Lower Left Drop Target	Q26	CPU	BRN-GRN	CPU CN 12-6	RED	PS CN 3-6,7	32v	23-700
14	Coil: Upper VUK 50v	Q25/Q4	PPB	BRN-BLU	PPB J 8-7	VIO-YEL	PPB J 7-3	50v	25-1240
15	Coil: Upper Left Wheel Ball Deflector	Q24	CPU	BRN-VIO	CPU CN 12-8	RED	PS CN 3-6,7	32v	27-1500
16	Coil: Paddle Wheel	Q23	CPU	BRN-GRY	CPU CN 12-9	RED	PS CN 3-6,7	32v	Relay
17	Coil: Left Turbo Bumper	Q11	CPU	BLU-BRN	CPU CN 19-7	RED	PS CN 3-6	32v	23-700
18	Coil: Center Turbo Bumper	Q9	CPU	BLU-RED	CPU CN 19-4	RED	PS CN 3-6	32v	23-700
19	Coil: Right Turbo Bumper	Q8	CPU	BLU-ORN	CPU CN 19-3	RED	PS CN 3-6	32v	23-700
20	Coil: Left Slingshot	Q10	CPU	BLU-YEL	CPU CN 19-6	RED	PS CN 3-6	32v	23-800
21	Coil: Right Slingshot	Q12	CPU	BLU-GRN	CPU CN 19-8	RED	PS CN 3-6	32v	23-800
22	Coil: Laser Kick 50v	Q13/Q1	PPB	BLU-BLK	CPU CN 19-9	VIO-YEL	PS CN 3-6	50v	23-800

Flipper Solenoids

SSFB No.	Flipper Coil	Cabinet Switch	Switch Drive	Switch Return	E.O.S.	GND	Flipper 50vDC Power	Flipper 8vAC Hold	Flipper Coil Output
SSFB 1	Lwr. Rt. Flipper 23-900 BLU/YEL ORN/VIO	BLU-VIO SSFB CN1-7	GRN-GRY CPU CN8-9 TO SSFB CN1-4	WHT-GRY CPU CN10-1 TO SSFB CN1-3	BRN-VIO RT. EOS SW. TO CN1-1	BLK CPU CN5 TO CN1-6	BLK-WHT PPB J7-1, -5 to SSFB CN2-8, -9	GRY-GRN-GRY P/S CN1-10, -11, to SSFB CN2-7, -8	50v I 8vAC Q2, Q3, I SR1 CN2-7, 8
SSFB 1	Lwr. Lt. Flipper 23-900 GRY/YEL ORN/GRY	BLU-GRY SSFB CN1-11	GRN-GRY CPU CN8-9 TO SSFB CN1-4	WHT-VIO CPU CN10-2 TO SSFB CN1-5	BRN-GRY LT. EOS SW. TO CN1-9	BLK CPU CN5 TO CN1-6	BLK-WHT PPB J7-1, -5 to SSFB CN2-8, -9	GRY-GRN-GRY P/S CN1-10, -11, to SSFB CN2-7, -8	50v I 8vAC Q10, Q9, I SR2 CN2-4, 5
SSFB 1	Upr. Rt. Flipper 23-900 BLU/YEL ORN/GRY	GRY-VIO SSFB CN1-12	GRN-GRY CPU CN8-9 TO SSFB CN1-4	WHT-GRY CPU CN10-2 TO SSFB CN1-10	Not Used	BLK CPU CN5 TO CN1-6	BLK-WHT PPB J7-1, -5 to SSFB CN2-8, -9	GRY-GRN-GRY P/S CN1-10, -11, to SSFB CN2-7, -8	50v I 8vAC Q16, Q15,I SR3 CN2-1, 2

MAVERICK THE MOVIE

Manual Addendum Nº 01

Data East Pinball, Inc.
1990 Janice Avenue
Melrose Park, IL 60160
✆ 1-800-KICKERS or ✆ 708-345-7700
Fax: 708-345-7889

Technical Support

Joe Blackwell, Director, Technical Support
Eric Winston, Technical Support Engineer
Jay Alfer, Tech. Doc. Administrator
Steve Novak, Technical Support Manager

TO: Parts & Service Managers

DATE: October 24, 1994

GAME: Maverick, The Movie Pinball

The following corrections need to be made in your Maverick Manual and the Cabinet and Backbox Page Inserts stapled in the game:

1. Page 4; Table "**A: In the Backbox**" & Picture Diagram: delete **F7**; it is not used on the new Power Supply Board, P.N. 520-5047-03.

2. Page 35; Coil 5L, 5-Bank Drop Target.

Drive Transistor	**FROM**	Q4	**TO**	Q42
Power Line	**FROM**	YEL/VIO	**TO**	BRN
Power Description	**FROM**	50v L	**TO**	32v L

3. Page 35; Coil 6L, 3-Bank Drop Target.

Drive Transistor	**FROM**	Q3	**TO**	Q41
Power Line	**FROM**	YEL/VIO	**TO**	BRN
Power Description	**FROM**	50v L	**TO**	32v L

4. Page 35; Coil 14, Upper VUK 50v.

Drive Transistor	**FROM**	Q3	**TO**	Q4.

Attached are the corrected pages 4 & 35 and the corrected Pinball Game Page Insert for the Cabinet and Backbox.

DESCRIPTION OF CHANGE (Text and/or Part Nº):					
EDIT		**ADD**		**DELETE**	
Pages: 35	**Line/Item: ***	**Page:**	**Line/Item:**	**Page: 4**	**Line/Item:**
Page 35 Table Corrections				Page 4 Table Correction	
(See above for details)				(See above for details)	

MAVERICK THE PINBALL

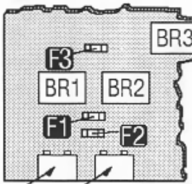

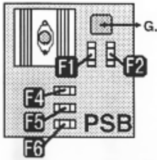

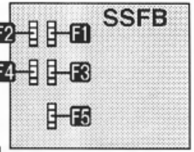

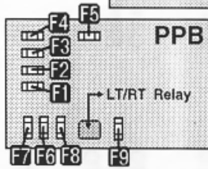

Backbox Bridges Mounted In Backbox	
F1	BR2 8A Slo-Blo 32v DC Coils/Flashers
F2	BR1 8A Slo-Blo 18v DC Lamps
F3	BR3 8A Slo-Blo 18v DC Display
Cabinet Fuses	
Main Fuse Line: 8A Slo-Blo 250v	
International 2X 4A Slo-Blo 250v	

Power Supply Board PSB	
F1	7A Slo-Blo +5vDC Regulator Input (9vAC)
F2	7A Slo-Blo +5vDC Regulator Input (9vAC)
F3	Not Used
F4	8A Slo-Blo Switched Illum'tion Buss (18vDC)
F5	4A Slo-Blo Solenoid (32vDC) Bumpers, Slingshots, etc.
F6	5A Slo-Blo Solenoid Buss (32vDC) L/R Relay Coils/Flash

Playfield Power Board PPB	
F1	G.I. 5A Slo-Blo Playfield
F2	G.I. 5A Slo-Blo Backbox Dr./Spkr. Panel
F3	G.I. 5A Slo-Blo Playfield & Coin Door
F4	G.I. 5A Slo-Blo Backbox Door
F5	50v 5A Flippers /All 50v Coils
F6	32v Flash Lamps 3A Slo-Blo/Right
F7	32v 3A Coils/Flash Right/Left
F8	50v 4A / 50v Coils
F9	50v 5A Laser Kick

Solid State 3-Flipper Bds. SSFB	
F1	3A 250vSlo-Blo 50v DC Output (All Fuses) Right Flipper
F2	3A 250v Slo-Blo 9v AC Holding
F3	3A 250v Slo-Blo 50v DC Output Left Flipper
F4	3A 250v Slo-Blo 9v AC Holding
F5	3A 250v Slo-Blo 50v DC Output Upper LT Flipper

Switched, CPU Controlled Auxiliary & Constant Power Solenoids

Coil No.	Coil or Flashlamp Description	Drive Transistor (D.T.)	On Which Board?	D.T. Control Line	D.T. Control Line Connect	Power Line	Power Line Connection	Power Description	Coil or Flash Type
1L	Coil: 4-Ball Ass'y Lockout	Q46	CPU	VIO-BRN	PPB J 2-1	BRN	PPB J 6-1, 2	32v L	25-1240
1R	Flashlamp: X4 P/F, Insert X3 Skill Shot Flash			BLK-BRN	PPB J 9-1	ORG	PPB J 6-4, 5	32v R	Bulb #89
2L	Coil: Ball Release (Eject)	Q45	CPU	VIO-RED	PPB J 2-2	BRN	PPB J 6-1, 2	32v L	23-800
2R	Flashlamp: X4 P/F, Insert X3 Jokers Flash			BLK-RED	PPB J 9-6	ORG	PPB J 6-4, 5	32v R	Bulb #89
3L	Coil: Skill Shot Launch 50v	Q5	PPB	VIO-ORG	PPB J 8-2	YEL/VIO	PPB J 7-8	50v L	23-800
3R	Flashlamp: X3 P/F, Insert X1 Turbo Bumpers Flash	Q44	CPU	BLK-ORG	PPB J 9-3	ORG	PPB J 6-4, 5	32v R	Bulb #89
4L	Coil: 5-Bank D.T. Autodrop Down	Q43	CPU	VIO-YEL	PPB J 2-4	BRN	PPB J 6-1, 2	32v L	32-1800
4R	Flashlamp: X3 P/F, Insert X1 Paddle Wheel Flash			BLK-YEL	PPB J 9-4	ORG	PPB J 6-4, 5	32v R	Bulb #89
5L	Coil: 5-Bank Drop Target	Q42	PPB	VIO-GRN	PPB J 8-4	BRN	PPB J 7-8	32v L	23-700
5R	Flashlamp: X2 P/F, Insert X2 Lower Left Flash		CPU	BLK-GRN	PPB J 9-5	ORG	PPB J 6-4, 5	32v R	Bulb #89
6L	Coil: 3-Bank Drop Target	Q41	PPB	VIO-BLU	PPB J 8-7	BRN	PPB J 7-8	32v L	23-800
6R	Flashlamp: X2 P/F, Insert X2 Right D.T. Flash		CPU	BLK-BLU	PPB J 9-6	ORG	PPB J 6-4, 5	32v R	Bulb #89
7L	Coil: 4-Bank Drop Target	Q40	CPU	VIO-BLK	PPB J 2-8	BRN	PPB J 6-1, 2	32v L	23-700
7R	Flashlamp: X1 P/F, Insert X3 3-Bank D.T. Flash			BLK-VIO	PPB J 9-7	ORG	PPB J 6-4, 5	32v R	Bulb #89
8L	Coil: Knocker 32v (In Cabinet)	Q39	CPU	VIO-GRY	PPB J 2-8	BRN	PPB J 6-1, 2	32v L	23-800
8R	Flashlamp: X3 P/F, Insert X2 Lwr. LT 5-Bank D.T. Flash			BLK-GRY	PPB J 9-8	ORG	PPB J 6-4, 5	32v R	Bulb #89
09	Coil: Back Panel Diverter	Q30	CPU	BRN-BLK	CPU CN 12-1	RED	PS CN 3-6,7	32v	32-1800
10	Coil: Located on PPB in Backbox Left & Right Relay	Q29	CPU	BLK-RED	CPU CN 12-5	RED/WHT	PS CN 6-7	32v	24v DC 10A DPDT
11	Coil: Located on Power Supply Bd G.I. Relay	Q28	CPU	BRN-ORG	CPU CN 12-4	RED	PS CN 3-6,7	32v	24v DC 10A DPDT
12	Coil: Riverboat Ball Lock	Q27	CPU	BRN-YEL	CPU CN 12-5	RED	PS CN 3-6,7,8	32v	27-1500
13	Coil: 5-Bank Lwr. LT D.T.	Q26	CPU	BRN-GRN	CPU CN 12-6	RED	PS CN 3-6,7	32v	23-700
14	Coil: Upper VUK 50v	Q25/4	PPB	BRN-BLU	PPB J 8-7	VIO-YEL	PPB J 7-3	50v	25-1240
15	Coil: Upr. LT Ball Deflector	Q24	CPU	BRN-VIO	CPU CN 12-8	RED	PS CN 3-6,7	32v	27-1500
16	Coil: Paddle Wheel	Q23	CPU	BRN-GRY	CPU CN 12-9	RED	PS CN 3-6,7	32v	Relay
17	Coil: Left Turbo Bumper	Q11	CPU	BLU-BRN	CPU CN 19-7	RED	PS CN 3-6	32v	23-700
18	Coil: Center Turbo Bumper	Q9	CPU	BLU-RED	CPU CN 19-4	RED	PS CN 3-6	32v	23-700
19	Coil: Right Turbo Bumper	Q8	CPU	BLU-ORG	CPU CN 19-3	RED	PS CN 3-6	32v	23-700
20	Coil: Left Slingshot	Q10	CPU	BLU-YEL	CPU CN 19-6	RED	PS CN 3-6	32v	23-800
21	Coil: Right Slingshot	Q12	CPU	BLU-GRN	CPU CN 19-8	RED	PS CN 3-6	32v	23-800
22	Coil: Laser Kick 50v	Q13/1	PPB	BLU-BLK	CPU CN 19-9	VIO-YEL	PS CN 3-6	50v	23-800

SWITCH MATRIX CHART

Row: Return / Column: Drive	1 Q55 GRN-BRN CN8-1	2 Q54 GRN-RED CN8-2	3 Q53 GRN-ORN CN8-3	4 Q52 GRN-YEL CN8-4	5 Q51 GRN-BLK CN8-5	6 Q50 GRN-BLU CN8-7	7 Q49 GRN-VIO CN8-8	8 Q48 GRN-GRY CN8-9
1 WHT-BRN CN10-9	Plumb Tilt 1	Not Used 9	Lower Left 5-Bank D.T. Bottom 10♠ 17	Upper Left 5-Bank R/O D.T. Bottom 3♠ 25	Right 4-Bank D.T. Bottom 9♠ 33	Left Turbo Bumper 41	Right Outlane 49	Left Outlane 57
2 WHT-RED CN10-8	4th Coin 2	Not Used 10	Lower Left 5-Bank D.T. Lwr. Middle J♠ 18	Upper Left 5-Bank R/O D.T. 4♠ 26	Right 4-Bank D.T. Lwr. Middle 9♦ 34	Center Turbo Bumper 42	Right Ramp Left S-U Target 50	Right Ramp Right S-U Target 58
3 WHT-ORN CN10-7	Credit Button 3	#1 (Left) Ball Trough 11	Lower Left 5-Bank D.T. Middle Q♠ 19	Upper Left 5-Bank R/O D.T. Middle 5♦ 27	Right 4-Bank D.T. Upr. Middle 9♠ 35	Right Turbo Bumper 43	Right Slingshot 51	Left Slingshot 59
4 WHT-YEL CN10-6	Right Coin 4	#2 Ball Trough 12	Lower Left 5-Bank D.T. Upr. Middle K♠ 20	Upper Left 5-Bank R/O D.T. 6♠ 28	Right 4-Bank D.T. Top 9♥ 36	Right Ramp Enter Gate 44	RT Ramp Kick Big Bottom 52	Right Orbit Roll-over Sw. 60
5 WHT-GRN CN10-5	Center Coin 5	#3 Ball Trough 13	Lower Left 5-Bank D.T. Top A♠ 21	Upper Left 5-Bank R/O D.T. Top 7♠ 29	Top Lane Left 37	Paddle Wheel Front Lock OPTO 45	RT Ramp Skill Shot 1 53	Left Orbit Rollunder 61
6 WHT-BLU CN10-3	Left Coin 6	#4 Ball Trough 14	Center 3-Bank D.T. Left 8♠ 22	Captive Ball S-U Target 30	Top Lane MID LT 38	Paddle Wheel Back Lock OPTO 46	RT Ramp Skill Shot 2 54	Left Return Lane 62
7 WHT-VIO CN10-2	Slam Tilt 7	#5 (Right) Ball Trough 15	Center 3-Bank D.T. Middle 8♦ 23	VUK 31	Top Lane MID RT 39	Right Return Lane 47	RT Ramp Skill Shot 3 55	Left Flipper Lower 63
8 WHT-GRY CN10-1	Extra Ball Button 8	Shooter Lane 16	Center 3-Bank D.T. Right 8♥ 24	Upper RT Ramp Exit Gate 32	Top Lane Right 40	Not Used 48	Paddle Wheel Entrance (on P/F) OPTO 56	Right Flipper Upr./Lwr. 64

LAMP MATRIX CHART

Row GND / Column 18v	1 Q71 YEL-BRN CN7-1	2 Q70 YEL-RED CN7-2	3 Q69 YEL-ORN CN7-3	4 Q68 YEL-BLK CN7-4	5 Q67 YEL-GRN CN7-6	6 Q66 YEL-BLU CN7-7	7 Q65 YEL-VIO CN7-8	8 Q64 YEL-GRY CN7-9
1 Q72 RED-BRN CN6-1	Bank Heist (Captive Ball) 1	Shoot Again 9	21 (When Lit) 17	(Left) Turbo Bumper 25	Skill Shot #1 Bottom 33	Top Lane 1 ♣ 41	Ramp Joker #1 (Bottom) 49	4-of-a-Kind 57
2 Q73 RED-BLK CN6-2	Two of Hearts 2♥ 2	Lock #3 10	Poker Champion-Ship 18	(Center) Turbo Bumper 26	Skill Shot #2 34	Top Lane 2 ♦ 42	Ramp Joker #2 (Middle) 50	3-of-a-Kind 58
3 Q74 RED-ORN CN6-3	Three of Hearts 3♥ 3	Special 11	Lock #2 19	(Right) Turbo Bumper 27	Skill Shot #3 35	Top Lane 3 ♠ 43	Ramp Joker #3 (Top) 51	Straight 59
4 Q75 RED-YEL CN6-5	Four of Hearts 4♥ 4	Jackpot (Right Ramp Enter Right) 12	Coop's Cash 20	Lock #1 28	Not Used 36	Top Lane 4 ♥ 44	Stagecoach (RT Ramp Enter LT) 52	Royal Flush 60
5 Q76 RED-GRN CN6-6	Five of Hearts 5♥ 5	Not Used 13	Lauren Belle 21	5 Mil (1) (Left) 29	10 of Clubs / Diamonds 10♣ 10♦ 37	Ace of Spades A♠ 45	Seven of Clubs 7♣ 53	Two of Diamonds S-U 2♦ 61
6 Q77 RED-BLU CN6-7	Six of Hearts 6♥ 6	Spot Card (Left) 14	Bank Heist 22	5 Mil (2) (Middle Left) 30	Extra Ball 38	10 of Spades / Hearts 10♠ 10♥ 46	Seven of Diamonds 7♦ 54	Two of Clubs S-U 2♣ 62
7 Q78 RED-VIO CN6-8	Jack of Spades J♠ ('21') 7	Spot Card (Right) 15	Angel's Revenge 23	5 Mil (3) (Middle Right) 31	$ (Right Orbit) (#4) 39	$ (VUK) (#2) 47	Six of Clubs /Diamonds 6♣ 6♦ 55	Extra Ball Button 63
8 Q79 RED-GRY CN6-9	Raise / Fold 8	1 (One) Pair 16	Stage Coach 24	5 Mil (4) (Right) 32	$ (Ramp Enter) (#3) 40	$ (Left Orbit) (#1) 48	Seven of Hearts 7♥ 56	Start Button 64

Abbreviations: X=Times LT=Left RT=Right BOT=Bottom MID=Middle CT=Center P/F=Playfield D.T.=Drop Target S-U=Stand-Up

Typical Switch (Side View)

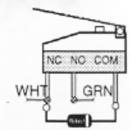

Diode 1N4001

DATA EAST
1990 Janice Ave. Melrose Park, IL 60160
§ § §
Tech Support Hotline
1-800-KICKERS
Outside U.S.A.
Tel. 708-345-7700
FAX
708-345-0010

© 1994 Data East Pinball, Inc. USA
820-6104-03